CATALOG NO.

PT0701-GR

First Edition

INSTRUCTIONS AND ILLUSTRATED PARTS LIST

STYLES

56100Z28B
56100Z30B
56100Z31B

CLASS 56100 - ADVANCED SERIES, BAG SEAMING MACHINES

Finest Quality

Union Special®
INDUSTRIAL SEWING EQUIPMENT

RoHS
2002/95/EC

03-31-09

From the library of: Diamond Needle Corp

CATALOG NO. PT0701-GR
ADJUSTNG INSTRUCTIONS AND
ILLUSTRATED PARTS LIST FOR
CLASS 56100
ADVANCED SERIES
BAG SEAMING MACHINE

STYLE
56100Z28
56100Z30
56100Z31

First Edition
© 2007

PRINTED 2007 IN USA

INFORMATION SUBJECT TO
CHANGE WITHOUT NOTICE

© Union Special Corporation
ALL Rights Reserved in All
Countries

From the library of: Diamond Needle Corp

IDENTIFICATION OF MACHINES

Each UNION SPECIAL machine carries a Style number, which on this Class machine is stamped into the style plate affixed to the right front of machine.

The serial number is stamped in the casting at the right rear base of machine.

Reference to directions, such as right, left, front or rear, are given relative to the operator's position while seated at the machine.Operating direction of the handwheel is counterclockwise, as viewed from the right end of machine.

CLASS DESCRIPTION

Advanced upper and lower feed, single needle, flat bed machine with needle bearing assembly for left mainshaft bushing. High throw, needle bearing needle bar drive, light weight presser bar and needle bar driving mechanism, enclosed automatic lubricating system, filtered oil return pumps for head and base, lateral looper travel.

MACHINE STYLE

56100Z28B Short looper travel with short looper. For seaming heavy poly and multi-wall paper bags. Single needle two threads. Seam specification 401SSa-1. Stitch range 3 ½ to 6. Sewing capacity up to 15/64" (6mm). Presser foot has filler cord guide. Maximum recommended speed 3800R.P.M. Recommended speed for machines operating on a duty cycle of 50% or more is at least 10% less than maximum.

56100Z30B Long looper travel with long looper and spreader. For seaming heavy poly and multi-wall paper bags. Single needle, one or two threads. Machine comes with spreader for one thread and looper for two thread operations. Seam specification 101 SSa-1 & 401SSa-1. . Stitch range 3 ½ to 6. Sewing capacity up to 15/64" (6mm). Presser foot has filter cord guide and tape slot. Maximum recommended speed 3800R.P.M. Recommended speed for machines operating on a duty cycle of 50% or more is 10% less than maximum.

56100Z31B Same as 56100Z30B except with small cloth plate cover and no thread stand. For use in automatic bag seaming systems.

NEEDLES

Each needle has both a type and size number.The type number denotes the kind of shank, point, length, groove, finish and other details. The size number, stamped on the needle shank, denotes largest diameter of blade, measured midway between shank and eye. Collectively, type and size number represent the complete symbol, which is given on the label of all needles packaged and sold by UNION SPECIAL.

Recommended needle is Type 947GA. It has a round shank, round point, No. 2 bag length, double groove, spotted, short point, chromium plated, and is available in sizes - 200/080.

Selection of proper needle size is determined by size of thread used. Thread should pass freely through needle eye in order to produce a good stitch formation.

To have needle orders promptly arid accurately filled, an empty package,a sample needle, or the type and size number should be forwarded. Use description on label. A complete order would read: "1000 Needles, Type 947GA, Size 200/080".

From the library of: Diamond Needle Corp

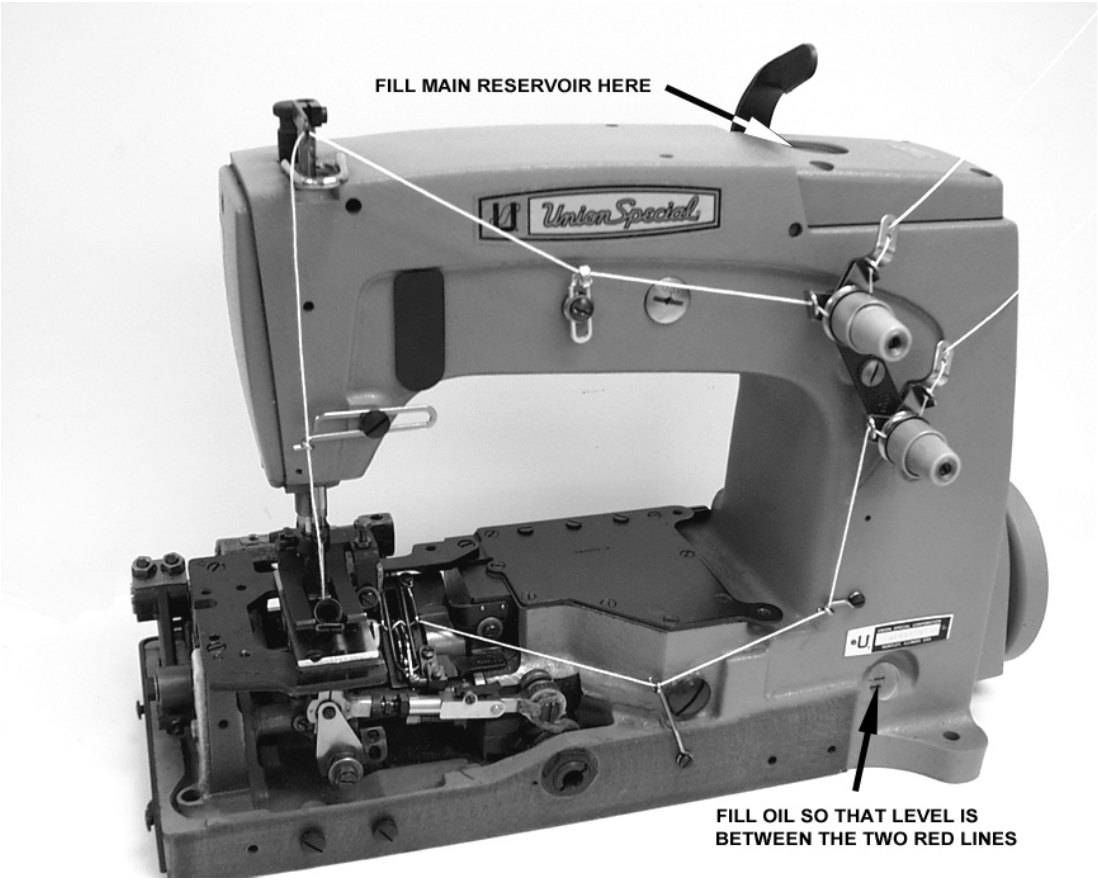

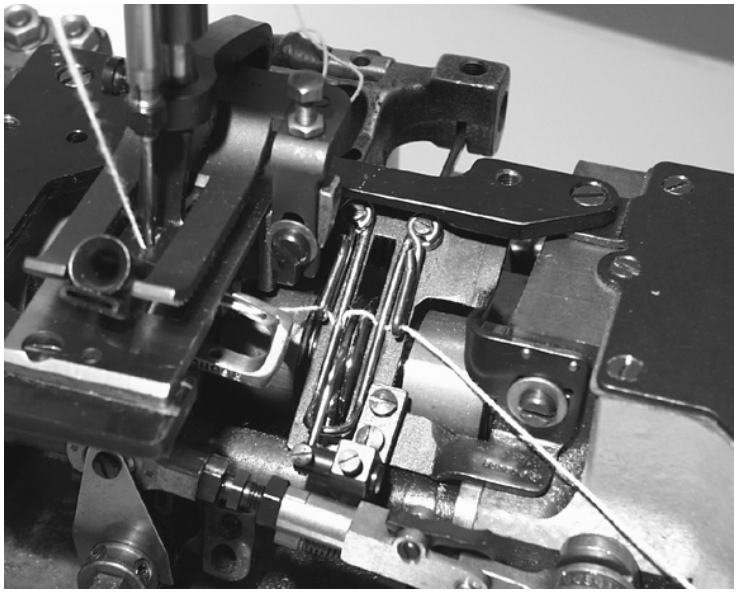

Fig 1

THREADING AND OILING DIAGRAM

For 401 stitch, thread machine as indicated above. The looper threading has been enlarged for clarity.

For 101 stitch, thread machine using needle thread only.

The oil has been drained from the machine before shipping and the reservoir must be filled before starting to operate. Maintain oil level between the two red lines and add oil when oil level drops below the bottom red line. The machine is automatically lubricated and no oiling other than keeping the main reservoir filled is necessary. For further lubricating instructions refer to paragraph on "LUBRICATION".

From the library of: Diamond Needle Corp

SAFETY RULES

CAUTION

THIS SAFETY SYMBOL INDICATES YOUR PERSONAL SAFETY IS INVOLVED.

TO PREVENT PERSONAL INJURY:

- All power sources to the machine MUST be TURNED OFF before threading, oiling, adjusting or replacing parts.
- Wear safety glasses.
- All shields and guards MUST be in position before operating machine.
- DO NOT tamper with safety shields, guards, etc., while machine is in operation.

LUBRICATION

Use a straight mineral oil with a Saybolt viscosity of 90 to 125 seconds at 100 degrees F. This is equivalent to UNION SPECIAL Specification No. 175.

Before operating, fill machine with oil at plug screw (A, Fig. 2). While filling machine with oil, check gauge (B). When proper oil level is reached, the oil level should appear in the center between the two red lines on gauge (B). It is recommended to always check oil level before operating to be sure machine is filled between the lines. CAUTION: DO NOT over fill machine.

To drain oil, remove plug screw, at right, in front, below handwheel or lower crank chamber cover on back of machine. Oil must be changed every 2000 operating hours to minimize wear.

On new machines, or a machine out of service for an extended period of time; lubricate machine as follows:

Remove head cover, clean out lint, then directly oil needle bar link and needle bar. Replace head cover and fill machine with oil to proper level. Run machine at low RPM to ensure proper lubrication of components preventing any damage which may occur from lack of oil distribution.

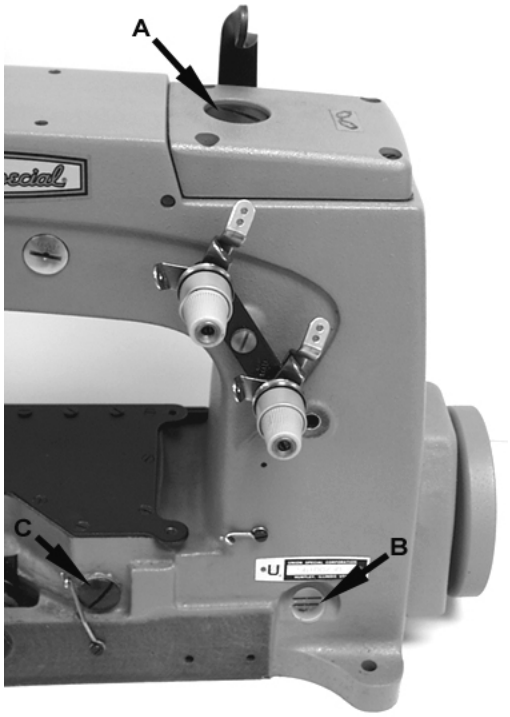

Fig 2

From the library of: Diamond Needle Corp

SYNCHRONIZING LOOPER AND NEEDLE MOTIONS

Fig 3

Synchronization is the most important adjustment involving the needle and looper motion relation, because it maintains the needle-looper relation at both the needle loop taking time, as well as when the needle enters the looper triangle. This adjustment is best made using synchronization gauge set TT34.

Remove the throat plate, feed dog, looper and needle thread take-up wire, (also called strike-off wire). Fig 3 Using gauge set TT34, re-attach the throat plate (A) to the throat plate support with the throat plate screws. Insert the pin (B) into the hole for the looper and tighten with its screw. Turn the handwheel in operating direction, (towards the operator), until the pin lightly touches the right edge of the throat plate. Insert the indicator (C) into the hole for the needle thread take-up wire, and move it up or down until the pointer (D) on the indicator reads at "0", and then tighten the screw. Now turn the handwheel in opposite of operating direction (away from the operator), until the pin again lightly touches the right edge of the plate. If the machine is synchronized the pointer on the indicator should again read "0". If the pointer is above or below the "0", the machine is out of synchronization. A variation of one line is allowable.

To synchronize the machine the following procedure should be followed. Thread screw (F) (99271), from gauge kit TT34, into the looper drive lever rocker shaft through the center of the thrust adjusting screw.

If the pointer (D) on the indicator reads above the "0" (Fig. 3A). Loosen screw (E) in the looper drive lever and pull screw (F), (99271), slightly toward the operator. Retighten screw (E) in the looper drive lever and recheck the synchronization as outlined above. Repeat as necessary to obtain proper synchronization.

If pointer on the indicator reads below the "0", (Fig. 3B). Loosen screw (E) in the looper drive lever and tap screw (F), (99271), slightly away from the operator. Retighten screw (E) in the looper drive lever and recheck the synchronization as outlined above. Repeat as necessary to obtain proper synchronization.

If synchronization gauge set TT34 is not available, the following procedure can be used.

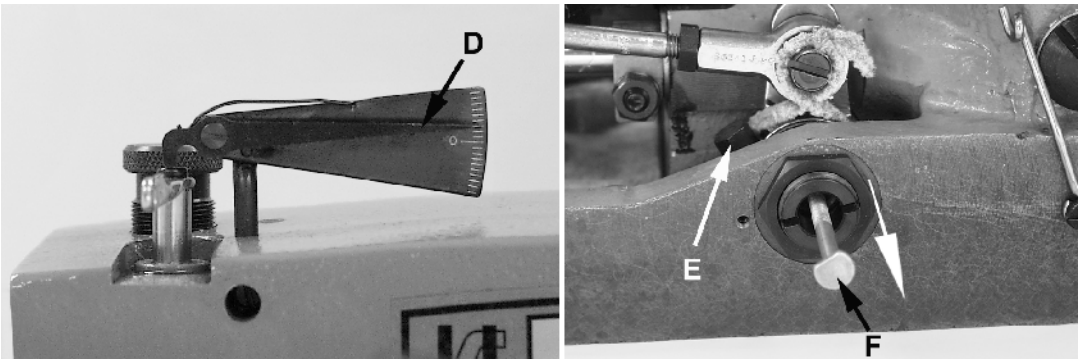

Fig 3A

From the library of: Diamond Needle Corp

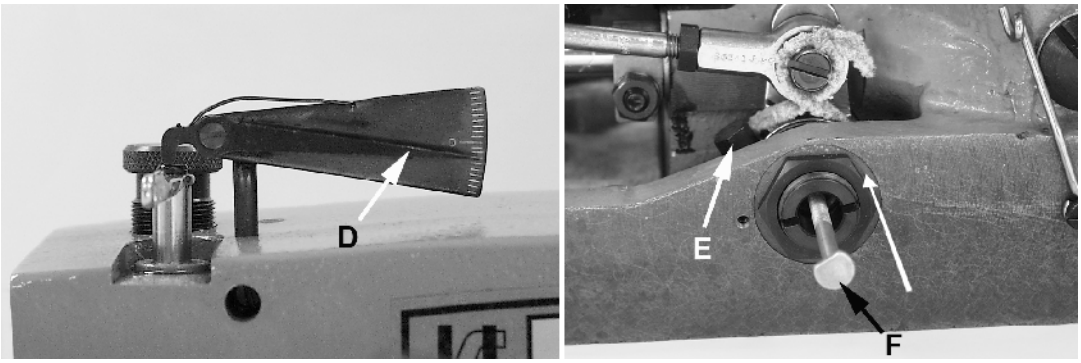

Fig 3B

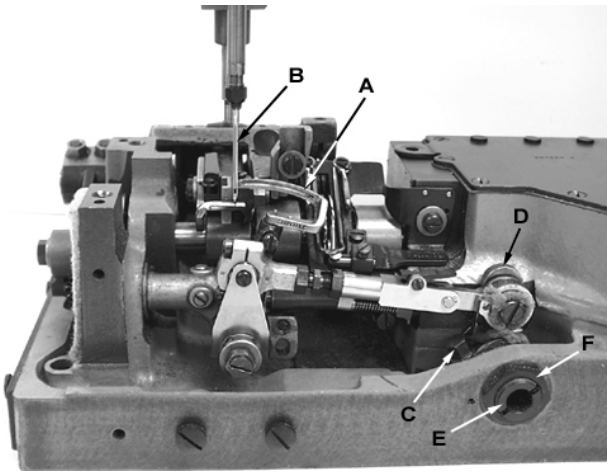

Fig 4

Turn handwheel in the operating direction until the point of the looper (A, Fig. 4) moving to the left, is even with the left side of needle (B). Note the height of the eye of the needle with respect to the looper point (See Fig. 4A). Turn the handwheel in the reverse direction until the point of the looper again moving to the left, is even with the left side of needle (See Fig. 4A). If the height of the eye of the needle with respect to the looper point are the same, looper and needle motions are synchronized - a variation of .005 inch (.127mm) is allowable. If the distance from the eye of the needle to the point of the looper is greater when the handwheel is turned in the operating direction, the looper drive lever rocker shaft will have to be moved slightly towards the rear. Moving the shaft towards the front acts the reverse.

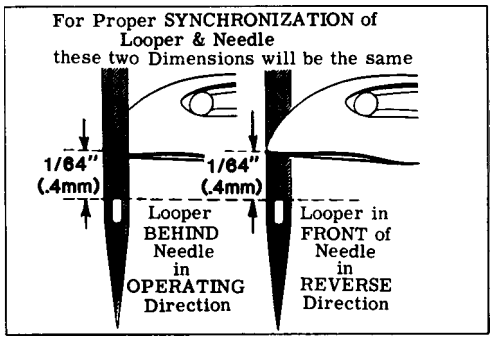

Fig 4A

NOTE: The 1/64 inch (.4mm) dimension shown in Fig. 4A is for final setting of needle bar height.

Adjust looper drive rocker lever shaft as follows:

Loosen screw (C, Fig. 4) in looper drive lever (D). A rod of .146-40 thd. or Union Special Screw No. 99271 can be threaded into the looper drive lever rocker shaft through the center of thrust adjusting screw (E). Tap or pull slightly as required to position shaft for proper synchronization. Tighten screw (C) securely and remove rod or screw used to position shaft.

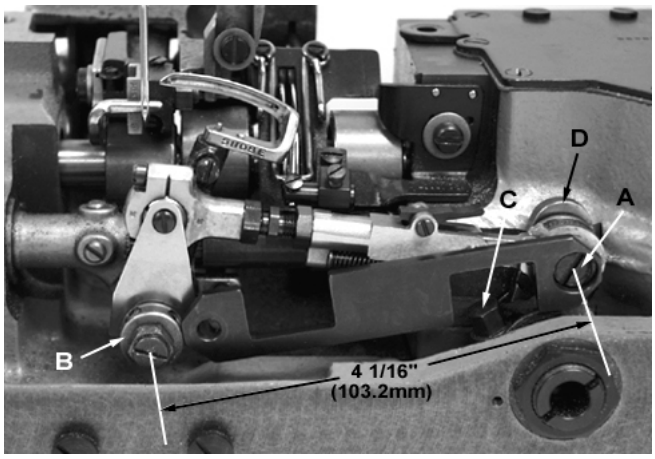

Fig 5

Loosen lock nut (F) and TORQUE thrust adjjusting screw (E) to 6 in. lbs. (7cm/kg); re-tighten lock nut (F) securely.

With the looper at extreme right end of travel, check location of the right looper connecting rod bearing using gauge No. TT35. Place large hole of gauge over threaded stud (A, Fig. 5). The left end of gauge should locate against the RIGHT side of looper rocker cone (B). If adjustment is necessary, loosen clamp screw (C) and reposition looper drive lever (D) as required, then tighten screw (C).

If gauge is not available, check setting with a scale. Distance between the centerline of rocker cone and centerline of looper drive lever stud should be 4 1/16 inch (103.2mm) as shown in Fig. 5 when looper is at its extreme right end of travel.

From the library of: Diamond Needle Corp

LOOPER AND LOOPER NEEDLE GUARD SETTINGS

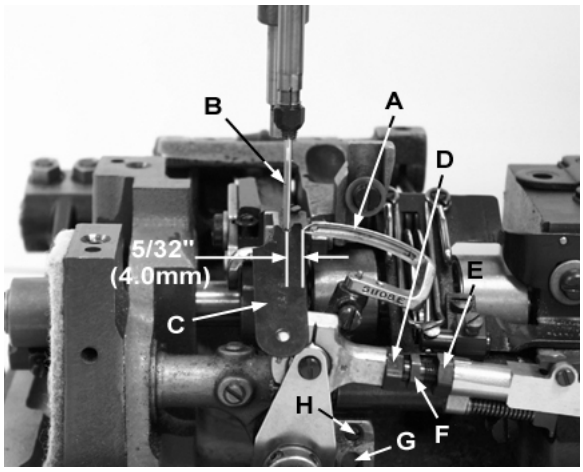

Fig 6

Insert a new needle, type and size specified. Looper gauge is 5/32 inch (4.Omm) which is the distance from point of looper (A, Fig. 6) to centerline of needle (B) when looper is at extreme right end of its travel. Looper gauge No. 21225-5/32 (C) is available for this setting. Adjustment can be made by loosening nut (D),(it has a left hand thread) and nut (E); turn connecting rod (F) as required to attain specified dimension. Hold connecting rod in position and tighten nut (E), then nut (D). NOTE: Be sure that the left ball joint is in a vertical position and does not bind after adjustment.

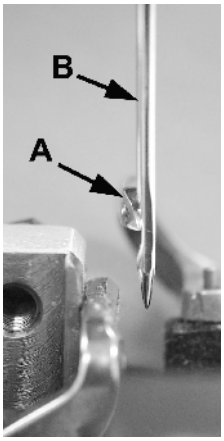

Fig 7

While turning handwheel in operating direction and the looper (A, Fig. 7) moves to the left, its point should be set to pass the rear of the needle (B) with .003" to .005" (.08 to .13mm) clearance. Adjustment can be made by loosening screw (G, Fig. 6), turn stop screw (H) clockwise to move looper towards the rear, counterclockwise acts the reverse. It is suggested to hold looper towards the front while making this adjustment. Tighten screw (G) after adjustment has been made and recheck movement of looper.

Looper needle guard (attached to looper), 56100Z28B only, should be set with the looper point set to the centerline of the needle, set front guard 0.005" to 0.010" (0.13 to 0.25 mm) away from looper.

NEEDLE BAR HEIGHT

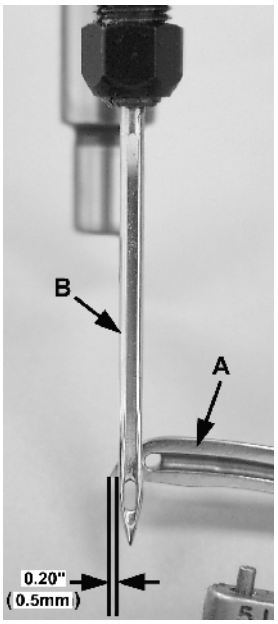

Fig 8

Turn handwheel to position point of looper (A, Fig. 8) 0.20" (0.5mm) past the left side of needle (B). At this time the top of the eye of the needle (B) should be even with the under side of the looper (A). To make adjustment, loosen screw (C Fig. 15) and move needle bar (A) up or down as required.

SETTING 101 STITCH RETAINER
56100Z30B & 56100Z31B

The 101 stitch retainer is used to hold open the needle loop as the looper moves to the right so that the needle can enter the loop to form the 101 stitch. To set the retainer.

Remove the throat plate and set the retainer (A, Fig 9) so that the tip is approximately 3/32″ (2.4mm) from the front of the needle hole in the throat plate and tighten screw (B). The retainer may need to be move in or out slightly if skipping or malformed stitches occur while sewing.

Attach the throat plate and looper/spreader to the machine. Turn the handwheel in operating direction until the looper moving to the right is directly under the tip of the retainer (Fig. 9A). Adjust the retainer tip up or down with screw (C, Fig 9B) so that there is .003″ to .005″ (0.10mm to 0.13mm) clearance between the top of the looper/spreader and the bottom tip of the retainer and then tighten screw (C).

From the library of: Diamond Needle Corp

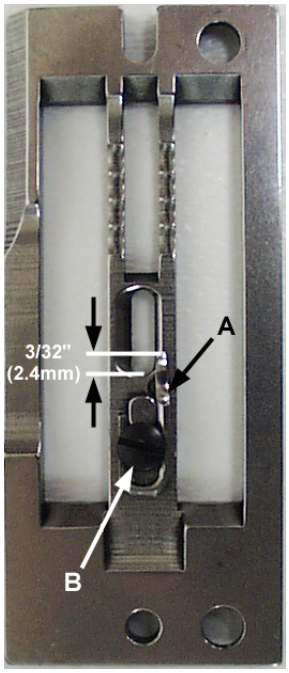

Fig 9

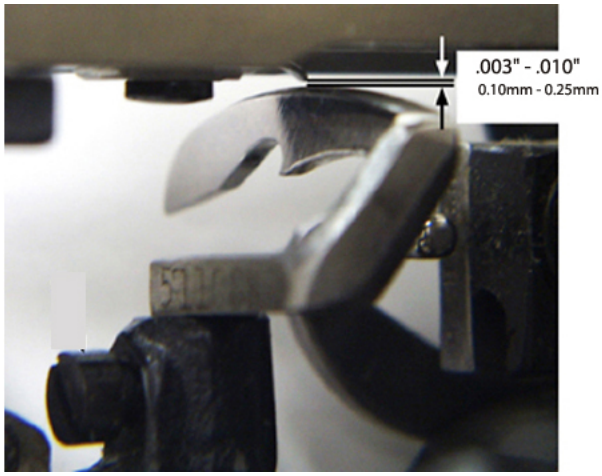

Fig 9A

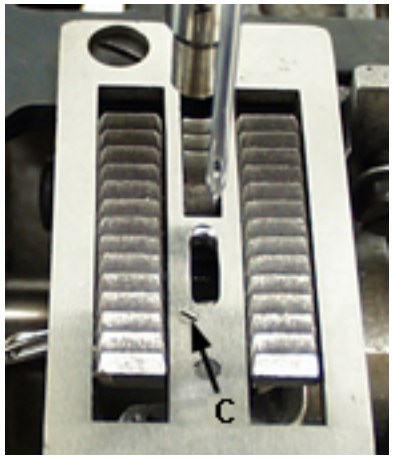

Fig 9B

FEED DOG SETTINGS

Feed dog (A, Fig. 10) should be centered in throat plate (B)with equal clearance on all sides and ends with feed travel set to desired stitch length. At highest point of travel, tips of feed dog teeth should extend the depth of 3/64" above throat plate and parallel to same. Screw (C) should be set to support feed dog after screw (D) has been loosened which secures feed dog in position.

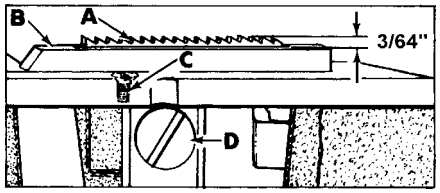

Fig 10

Parallel adjustment can be made by loosening nut (A, Fig. 11) and turn screw (B) clockwise to lower front of feed dog, counterclockwise acts the reverse. When properly set, retighten nut (A).

Right to left adjustment can be made by loosening screws (G, Fig. 12) and slightly move feed rocker (H) on feed rocker shaft (J) as required, then retighten screws. Check to ensure that feed rocker arm (K) does not bind after adjustment.
Forward or rearward centering of feed dog can be accomplished by loosening nuts (L, Fig. 12), move feed rocker (H) as required and retighten nut.

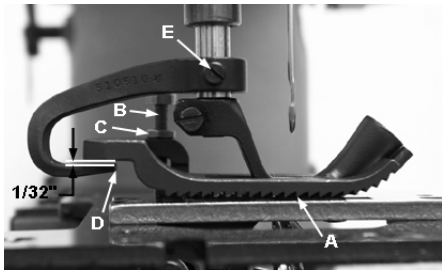

Fig 10A

SETTING THE UPPER FEED DOG

Set the up upper feed dog so at it lowest position the teeth will just contact the lower feed dog teeth (A, Fig 10A). To make this adjustment, loosen nut (C) and turn screw (B) up or down as required. Lock nut (C) after adjustment has been made.
Note: It may be necessary to raise the upper feed dog for thick materials or if tearing of the tape occurs.

SETTING THE UPPER FEED DOG LIFT LEVER

With the upper feed dog at its lowest position, set the lift lever so the there is approximately 1/32" clearance between the top of the lift lever and the bottom of the feed dog heel. (D, Fig 10A) To make this adjustment loosen screw (E) and move the lift lever up or down as required.

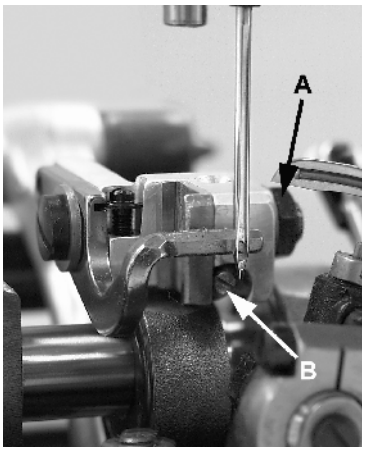

Fig 11

From the library of: Diamond Needle Corp

CHANGING STITCH LENGTH

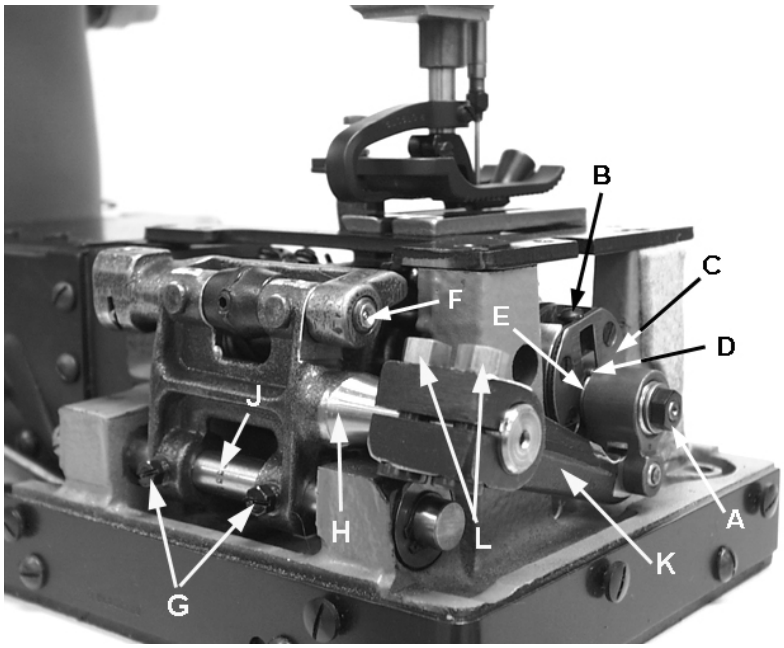

Fig 12

Set the stitch to required length.This is accomplished by loosening lock nut (A, Fig.12) 1/2 turn, (it has a left hand thread) on the end of the stitch regulating stud and turning stitch adjusting screw (B) located under the left end of the cloth plate in the head of the mainshaft (C), which is marked with "L" and "S". Turning the screw in a clockwise direction shortens the stitch (moves stitch regulating stud toward the "S") and turning it in a counterclockwise direction lengthens the stitch (moves stitch regulator stud toward the "L"). Retighten the lock nut securely. To prevent destructive damage to the feed drive bearing, key screw (D) must engage the "U" shaped key slot in ferrule (E).

LUBRICATING FEED BAR SHAFT

Grease fittings have been added to both ends of feed bar shaft (F, Fig 12). It is advisable to add #2 bearing grease at these points every month using grease gun AS60-187. A can of grease can be ordered under part number GR18.

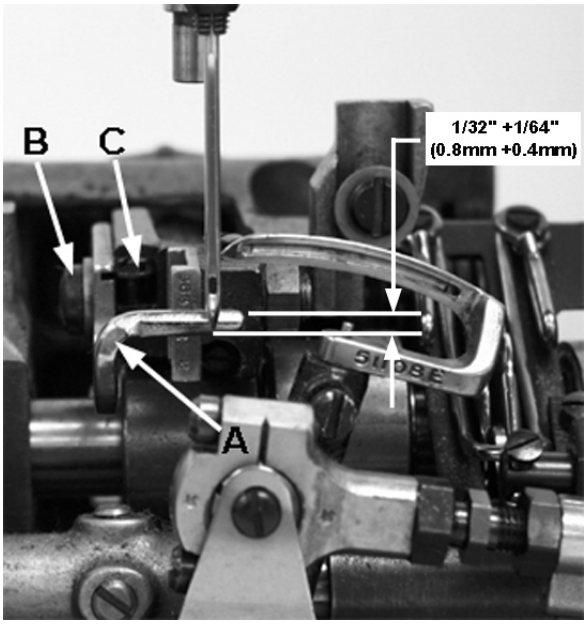

Fig 13

REAR NEEDLE GUARD

Rotate handwheel in operating direction to position looper point to just enter the scarf of needle. At this time the needle guard (A, Fig 13) should be at its extreme end of forward travel. Set the guard front to back as close as possible without touching the needle. Guard should be set as low as possible, yet have its vertical face approach above the needle point 1/32" +1/64" (0.8mm +0.4mm). To move the needle guard forward or backward, loosen the screw (B), move needle guard as required, and retighten screw. To raise or lower needle guard, loosen screw (B), and turn screw (C) clockwise to lower needle guard or counterclockwise to raise it. Retighten screw (B) after guard is properly set.

NOTE: Any change in stitch length will require a change in rear needle guard setting.

From the library of: Diamond Needle Corp

THREADING

Draw looper and needle threads into the machine and start operating on a piece of fabric. Refer to threading diagram (Fig. 1) for manner of threading this machine.

LOOPER THREAD CAST-OFF WIRE

Looper thread cast-off wire (A, Fig. 14) located on the take-up shield (B) controls the amount of slack thread in the system and can be moved to any position. It should be set laterally so that it is midway between the two discs of take-up (C) and the tip parallel with the discs.

It is usually set toward the take-up to almost the limit of its slot so that it barely clears the highest point of the take-up. The height and lateral adjustment of the retainer affects the control of looper thread as looper moves to the left. Ordinarily it will be set in approximately a horizontal position. More looper thread is given to the stitch when the retainer is raised and set towards the take-up. However, if the retainer is raised too high, the looper thread triangle may be wiped under the blade of the looper, causing traingle skips or pulled down stitches. This can be checked by observing the action of the looper thread as the looper moves to the left.

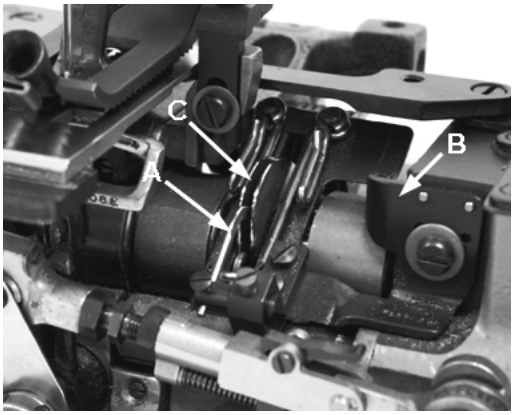

Fig 14

THREAD TENSIONS

Tension on the needle thread should be only sufficient to produce uniform stitches on the under surface of the fabric. Tension on the looper thread should be just sufficient to steady the thread.

PRESSER BAR HEIGHT

Height of presser bar (D, Fig. 15) is set correctly if it is possible to remove the presser foot when the foot lifter lever, located at the back of the machine and extending above the upper crank chamber cover is fully actuated (pulled to the right). There should be approximately 1/16 inch (1.6mm) clearance between lower surface of the presser bar connection and guide (E) and bottom surface of head opening in the bed when foot lifter lever is released and presser foot lying flat on the throat plate with feed dog below throat plate.

Adjustment can be made by turning handwheel to position needle bar at bottom of stroke. Loosen screw (F) and while holding presser foot down on throat plate, position presser bar connection and guide as required to attain specified clearance and retighten screw.

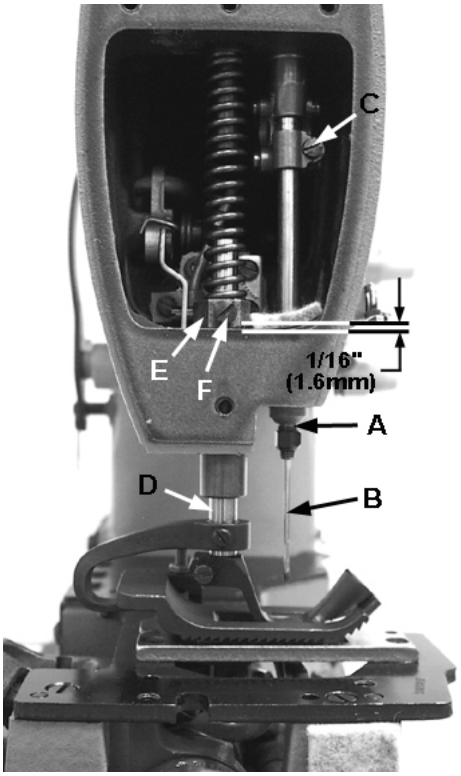

Fig 15

PRESSER FOOT PRESSURE

Regulate the presser spring regulating screw (A, Fig. 16) so that it exerts only enough pressure on the presser foot to feed the work uniformly when a slight tension is placed on the fabric. Turning it clockwise increases the pressure, counterclockwise acts the reverse.

From the library of: Diamond Needle Corp

SETTING NEEDLE THREAD GUIDE AND FRAME EYELET

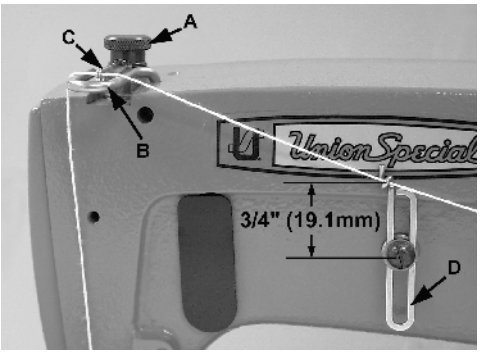

Fig 16

For 56100Z28B Turn handwheel in operating direction until the needle bar reaches its lowest position. Set needle thread take-up wire (B, Fig. 16 so that its thread contact surface is even with the center of the needle bar thread eyelet (C). Lower this setting for a smaller needle thread loop, raise for a larger loop. Set needle thread frame eyelet (D) so that it is approximately 3/4 inch (19.1mm) above centerline of its attaching screw (Fig. 16).

For 56100Z30B & Z31B Set the needle thread take-up wire (E, Fig 16A) to the lowest position. Set needle thread frame eyelet, (F) so that the screw is centered in the eyelet slot. Set the needle thread frame eyelet, lower, (G) so that the screw is just left of the center of the eyelet slot.

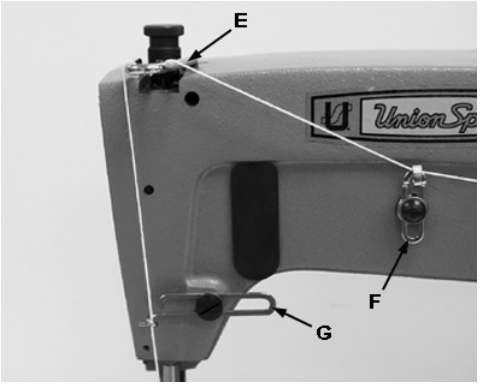

Fig 16A

TORQUE REQUIREMENTS

Torque specifications given in this catalog are measured in inch-pounds or centimeter/kilograms. All straps and eccentrics must be tightened to 19-21 in. lbs. (22-24cm/kg) unless otherwise noted.

All nuts, bolts, screws, etc., without torque specifications must be secured as tightly as possible, unless otherwise noted. Special torque specifications of connecting rods, links, screws, etc., are shown on part illustrations.

SPECIAL INSTRUCTIONS

NEEDLE LEVER

When adjusting needle lever or replacing related parts, follow instructions in sequence as listed:

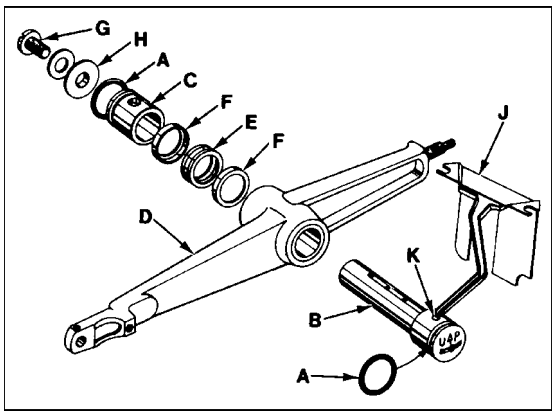

Fig 17

1. Install "O" rings (A, Fig. 17) onto needle lever stud (B) and thrust collar (C).

2. With needle lever (D) in machine and positioned properly; insert stud (B) through hole in needle lever until its shoulder contacts the needle lever and the word "UP" on stud is in the upright position. While making sure no binding exists in the needle bar link, secure stud (B) with the front set screw in top of machine bed.

3. Install temper load ring (E) and compression cups (F) onto stud (B), then push ring and cups through opening in machine bed.

4. Install thrust collar (C) onto stud (B) being careful not to damage "O" ring. Compress components together by tighening screw (G) until washer (H) bottoms against stud (B). Secure stud (B) in position using the rear set screw in top of bed.

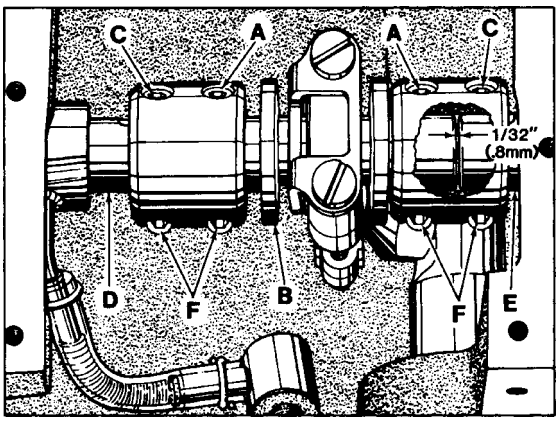

Fig 18

5. To check temper load ring for proper compression, remove screw (G) from stud (B) and loosen rear set screw in top of bed. Thrust collar (C) should spring out .003 - .007 inch (.08 .18mm). Compress load ring in reverse order, then tighten rear set screw.

6. With indented "UP" on stud (B) in upright position, install bearing oiler (J) so its hook sets in oil supply hole (K) of stud. When hook and stud are secured in their proper positions, the proper amount of oil will be channeled to stud for lubricating needle lever (D).

From the library of: Diamond Needle Corp

ALIGNING MAINSHAFT TO CRANKSHAFT

As viewed looking down from rear of machine, spot screws (A. Fig. 18) in the couplings must align with the spots in the looper drive crank (B) and set screws (C) must align with the flats on crankshaft (D) and mainshaft (E).

Mainshaft must be positioned laterally with .045 inch (1.14mm) clearance between the right side of its head and the bed .060" (1.5mm) casting as shown in Fig. 19.

Looper drive crank (B, Fig. 18) must be positioned laterally with 1/32 inch (.8mm) clearance between it and mainshaft (E) as shown in Fig. 18. Once these settings are made, it is very important that the coplings are tightened in the following sequence for best performance.

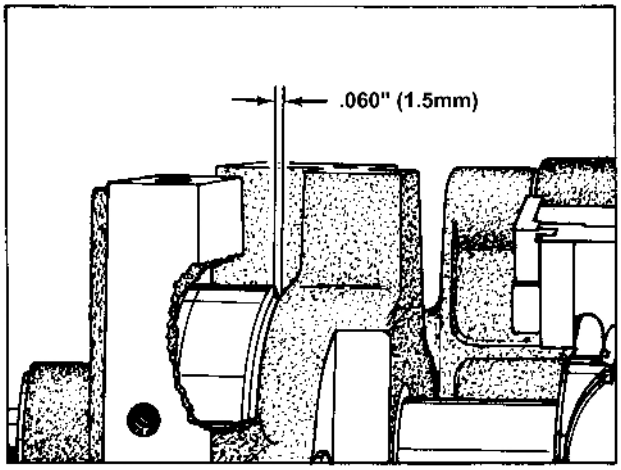

Fig 19

Tighten spot screws (A) temporarily, to the looper drive crank. Tighten set screws (C) temporarily, to the crankshaft and mainshaft. Torque screws (F) to 19 - 21 in. lbs. (22 - 24 cm/kg). Loosen spot screws (A) and set screws (C). Re-torque screws (F) to 19 - 21 in. lbs. (22 - 24 cm/kg), then torque screws (A and C) to 19 - 21 in. lbs. (22 - 24cm/kg).

The oil drip plate (A, Fig. 20) located in the oil reservoir should be positioned with its tip in the recessed cut out in the bed casting, as far to the left as possible without touching. It has elongated mounting holes and can be adjusted by loosening (2) screws (B) in top of the oil reservoir back cover to position as required, retighten screws.

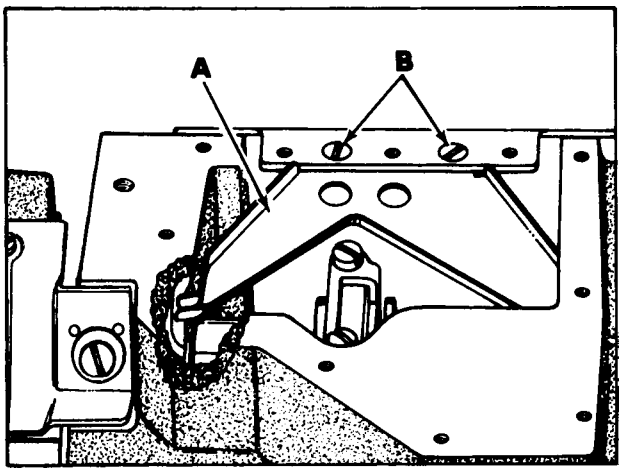

Fig 20

From the library of: Diamond Needle Corp

Before this machine left the factory it was adjusted and inspected to give you the utmost satisfaction and durability at all times. If, however, the machine has been readjusted and is not sewing properly, see the chart below for suggestions which may prove beneficial to you.

SKIPPED STITCHES

Condition	Causes	Cures
Needle loop too small	Frame needle thread guide set too low	Raise frame needle thread guide slightly.
	Needle thread stretched at bottom of stroke, loop not formed till stretch relieved	Lower frame thread eyelet and/or reduce needle tension
	Needle thread creased because it is too tight and needle is hot	Use oversize ball eye needle, lower frame needle eyelet, reduce tension
	Needle thread pinched by needle guard, collapsing needle loop	Drop needle guard slightly
	Thread twisting around needle	Keep needle loop as small as possible, keep needle thread tension to a minimum. Use a left twist thread
	Needle thread sticking in needle grooves, due to heat	Use lubricant on thread
	Needle does not rise enough to form needle loop properly	Increase looper gauge 1/64 to 1/32 inch
Looper misses needle loop as presser foot is coming off a seam	Material is not held down in front of seam and is flagging	See if presser bar is sticking
	Needle deflecting towards operator	Use sharp point needle
Needle loop formed properly but brushed out of the way .by looper	Needle bar set too high	Lower needle bar slightly
Looper misses needle loop when operator is trying to match seams or ends	Needle deflecting toward operator who may be holding back on material while matching seams or ends of garment	Do not hold back excessively on material. Properly adjust feed and maintain a proper feeding pressure on foot so operator does not hold back
Needle misses triangle on looper thread side	Looper thread too loose, not making a good triangle	Increase looper thread tension
	Needle being deflected to the rear by burr on needle point or due to operator pulling on material, or needle glancing off when coming on a seam	Do not pull material at the back. Use a sharp needle to stop needle from glancing off seam. Check needle for burr

NOTE: More detailed information concerning the double locked stitch (stitch type 401) is available under "Stitch Formation, Type 401".

From the library of: Diamond Needle Corp

ORDERING REPAIR PARTS

ILLUSTRATIONS

This catalog has been arranged to simplify ordering repair parts. Exploded views of various sections of the mechanism are shown so that the parts may be seen in their actual position in the machine. On the page opposite the illustration will be found a listing of the parts with their part numbers, descriptions and the number of pieces required in the particular view being shown.

Numbers in the first column are reference numbers only, and merely indicate the position of that part in the illustration. Reference numbers should never be used in ordering parts. Always use the part number listed in the second column.

Component parts of sub-assemblies which can be furnished for repairs are indicated by indenting their descriptions under the description of the main sub-assembly. Example:

48	29105AK	Crank Assembly, looper driving lever	1
49	22587K	Screw, bearing cap ,(upper)	2
50	56343C	Guide, ball joint	
1			
51	56343E	Splasher, oil	1
52	22559A	Screw, bearingcap (lower)	2

It will be noted in the above example that the eccentric, ball stud, and bearing are not listed. The reason is that replacement of these parts individually is not recommended, so the complete sub-assembly should be ordered.

At the back of the book will be found a numerical index of all the parts shown in this book. This will facilitate locating the illustration and description when only the part number is known.

IDENTIFYING PARTS

Where the construction permits, each part is stamped with its part number. On some of the smaller parts, and on those where construction does not permit, an identification letter is stamped in to distinguish the part from simil'ar ones.

Part numbers represent the same part, regardless of catalog in which they appear.

IMPORTANT! ON ALL ORDERS, PLEASE INCLUDE PART NAME AND STYLE OF MACHINE FOR WHICH PART IS ORDERED.

USE GENUINE REPAIR PARTS

Success in the operation of these machines can be secured only with genuine UNION SPECIAL repair parts as furnished by the Union Special Corporation, its subsidiaries and authorized distributors. They are designed according to the most approved scientific principles, and are made with utmost precision. Maximum efficiency and durability are assured.

From the library of: Diamond Needle Corp

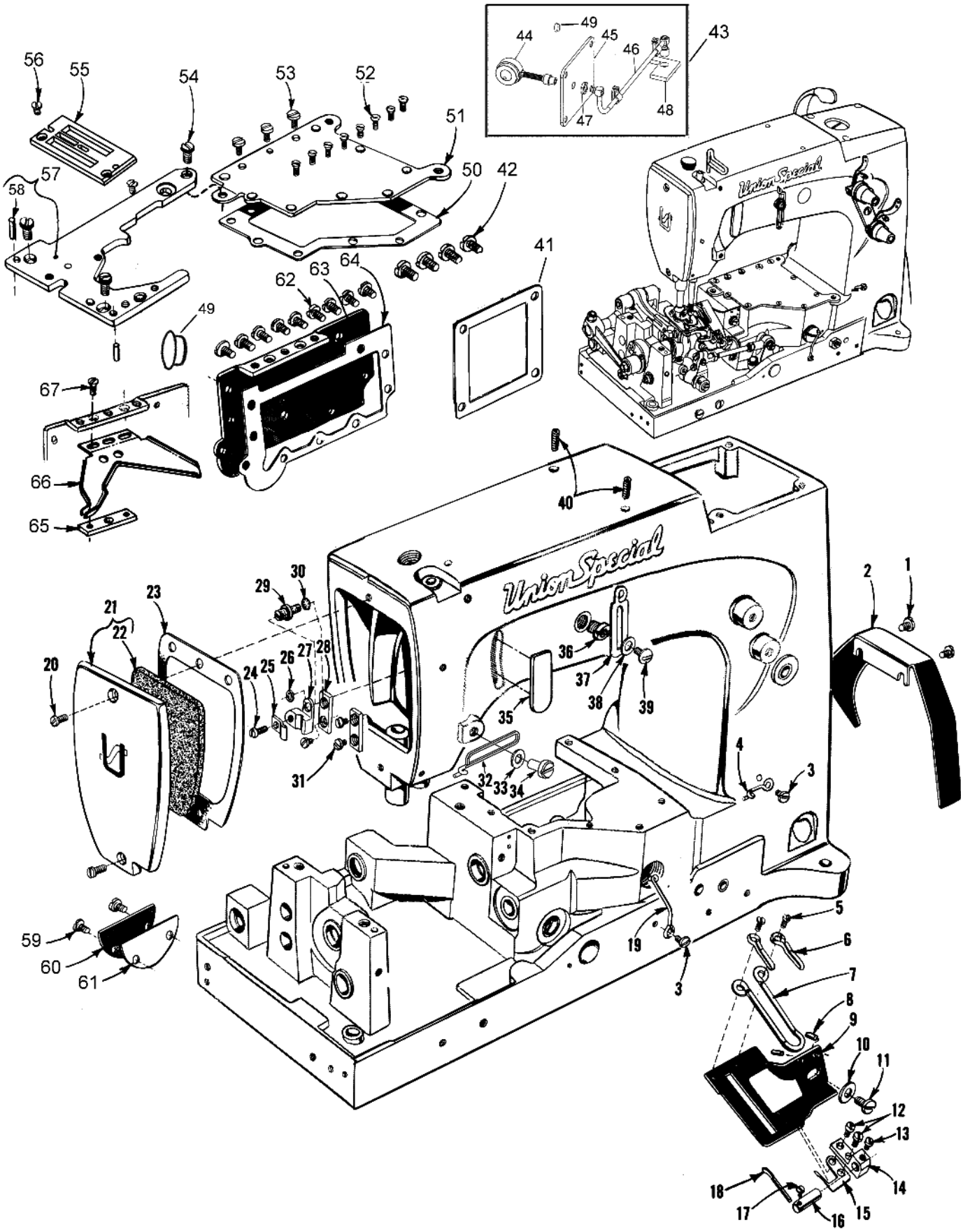

From the library of: Diamond Needle Corp

Ref. No.	Part No.	Description	Amt. Req.
1.	22829	Screw	2
2.	21375CE	Guard, belt	1
3.	98A	Screw	2
4.	52A	Eyelet, frame looper thread	1
5.	22593	Screw	2
6.	51158D	Eyelet, take-up	2
7.	51104L	Wire, cast-off	1
8.	50-216BLK	Pin, dowel	2
9.	51157J	Support, cast-off wire	1
10.	21657E	Washer	1
11.	22528	Screw	1
12.	J87J	Screw	2
13.	77	Screw, for 56100Z28B	1
14.	51204C	Support, auxiliary cast-off, for 56100Z28B	1
15.	51104J	Cast-off, auxiliary	1
-	K74642	Cast-off, auxiliary, for 56100Z30B, Z31B	1
16.	51204A	Support, cast-off wire, for 56100Z28B	1
17.	22798A	Screw, for 56100Z28B	1
18.	51204	Wire, cast-off, for 56100Z28B	1
19.	52958B	Eyelet, frame looper thread	1
20.	22569C	Screw	2
21.	56382	Cover, head	1
22.	56382A	Felt	1
23.	56382AT	Gasket	1
24.	22585	Screw	1
25.	56393D	Clamp, head oil tube	1
26.	7947	Nut	1
27.	56393C	Block, head oil tube mounying	1
28.	35731A	Plate, presser bar connection guide	2
29.	51294R	Screw	1
30.	660-342	Lockwasher	1
31.	22513	Screw	3
32.	539	Eyelet, frame needle thread	1
33.	20	Washer	1
34.	22548	Screw	1
35.	660-694	Gasket, needle lever eyelet	1
36.	22889A	Screw, adapter	1
37.	40003956	Eyelet, frame needle thread, for 56100Z30B, Z31B	1
-	539	Eyelet, frame needle thread, for 56100Z28B	1
38.	20	Washer	1
39.	22848	Screw	1
40.	22894E	Screw, needle lever thrust collar and stud	2
41.	56382AX	Gasket	1
42.	22548	Screw	4
43.	29480BFD	Oil Return Pump Kit	1
44.	56193D	Pump Assembly	1
45.	56382DB	Cover, lower crank chanmber	1
46.	56193N	Oil return tube assembly	1
47.	11638M	Nut	1
48.	56382AZ	Felt	1
49.	TA0750404RO	Plug	1
50.	56382AW	Gasket	1
51.	56382G	Cover, top oil reservoir	1
52.	22524	Screw	8
53.	22585A	Screw	3
54.	22839	Screw, throat plate support	3
55.	51124E	Throat Plate, for style 56100Z28B	1
	51124M	Throat Plate, for style 56100Z30B, Z31B	1
56.	22570	Screw	2
57.	51180H	Support, throat plate	1
58.	51280J	Pin, dowel	2
59.	22570A	Screw	2
60.	56382J	Cover, looper drive shaft	1
61.	56382AV	Gasket	1
62.	22848	Screw	9
63.	56382AA	Cover, back, oil reservoir	1
64.	56382AU	Gasket	1
65.	56382Y	Block, clamping	1
66.	56382AB	Plate, oil drip	1
67.	22524	Screw	2

From the library of: Diamond Needle Corp

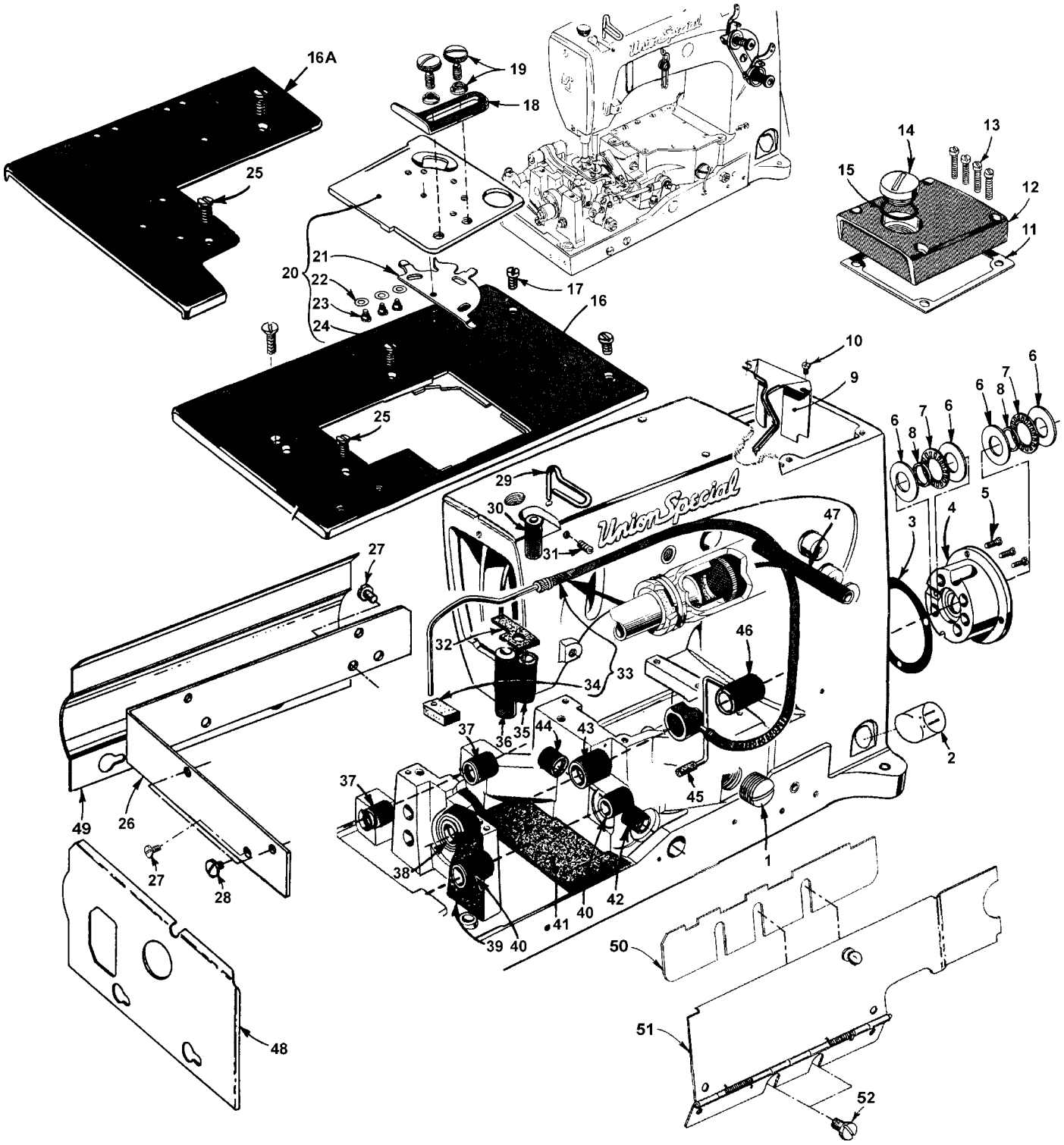

From the library of: Diamond Needle Corp

MAIN FRAME, BUSHINGS, OIL GAUGE AND MISCELLANEOUS OILING PARTS

Ref. No.	Part No.	Description	Amt. Req.
1.	22539R	Screw, plug	1
2.	51-902BLK	Gauge, oil sight	1
3.	56390E	Gasket	1
4.	57890B	Housing, crankshaft bushing, includes bushing	1
5.	22569B	Screw	3
6.	56390H	Washer, thrust	4
7.	660-665	Bearing, needle, thrust	2
8.	56390J	Ring, pilot	2
9.	56382AC	Plate, oil and baffle	1
10.	90	Screw	2
11.	56382AY	Gasket	1
12.	K74592	Cover, upper crank chamber	1
13.	22541C	Screw	4
14.	22733E	Plug, oil filter	2
15.	56382M	Gasket	1
16.	K74335	Cloth Plate, for styles 56100Z28B, Z30B	1
16A.	B51101A	Cloth Plate, for styles 56100Z31B	1
17.	22839C	Screw	2
18.	24X	Guide, edge(Extra send and charge)	1
19.	25	Screw, for 24X (Extra send and charge)	2
20.	K74334	Cover, cloth plate, for styles 56100Z28B, Z30B	1
21.	51281AC	Spring	1
22.	35772H	Washer, spring	3
23.	22760A	Screw	3
24.	22845B	Screw	1
25.	80	Screw	2/3
26.	G51382BA	Bracket, for shields	1
27.	22848	Screw	3
28.	99295	Screw	3
29.	56170	Wire, needle thread take-up, for styles 56100Z28B	1
-	K74922	Wire, needle thread take-up, for styles 56100Z30B, Z31B	1
30.	51154E	Bushing, needle bar (upper)	1
31.	95	Screw	1
32.	56393W	Pad, felt	1
33.	GR-56393T	Pump Assembly, oil, head	1
34.	56393L	Felt	1
35.	56154	Bushing, needle bar (lower)	1
36.	51257AA	Bushing, presser bar (lower)	1
37.	57836B	Bushing, feed rocker shaft	2
38.	56344G	Bearing Assembly	1
39.	666-259	Felt	1
40.	50-895BLK	Bushing, looper rocker shaft	2
41.	56193A	Felt, machine base (front)	1
42.	52942W	Bushing, looper drive lever shaft (front)	1
43.	56190	Bushing, mainshaft (intermediate)	1
44.	57842B	Bushing, looper drive lever shaft (rear)	1
45.	35897BV	Filter, oil intake	1
46.	56390G	Bushing, mainshaft (inner right)	1
47.	21657X	Bushing, tension release lever shaft	1
48.	G51381BA	Oil Shield, left	1
49.	G51381BD	Oil Shield, rear	1
50.	52978Z	Shim stop	1
51.	51282AJ	Hinged oil shield	1
52.	25S	Screw	2
-	21227HR	Aligning Tool, for replacing 56344G bearing assembly (not shown)	1

From the library of: Diamond Needle Corp

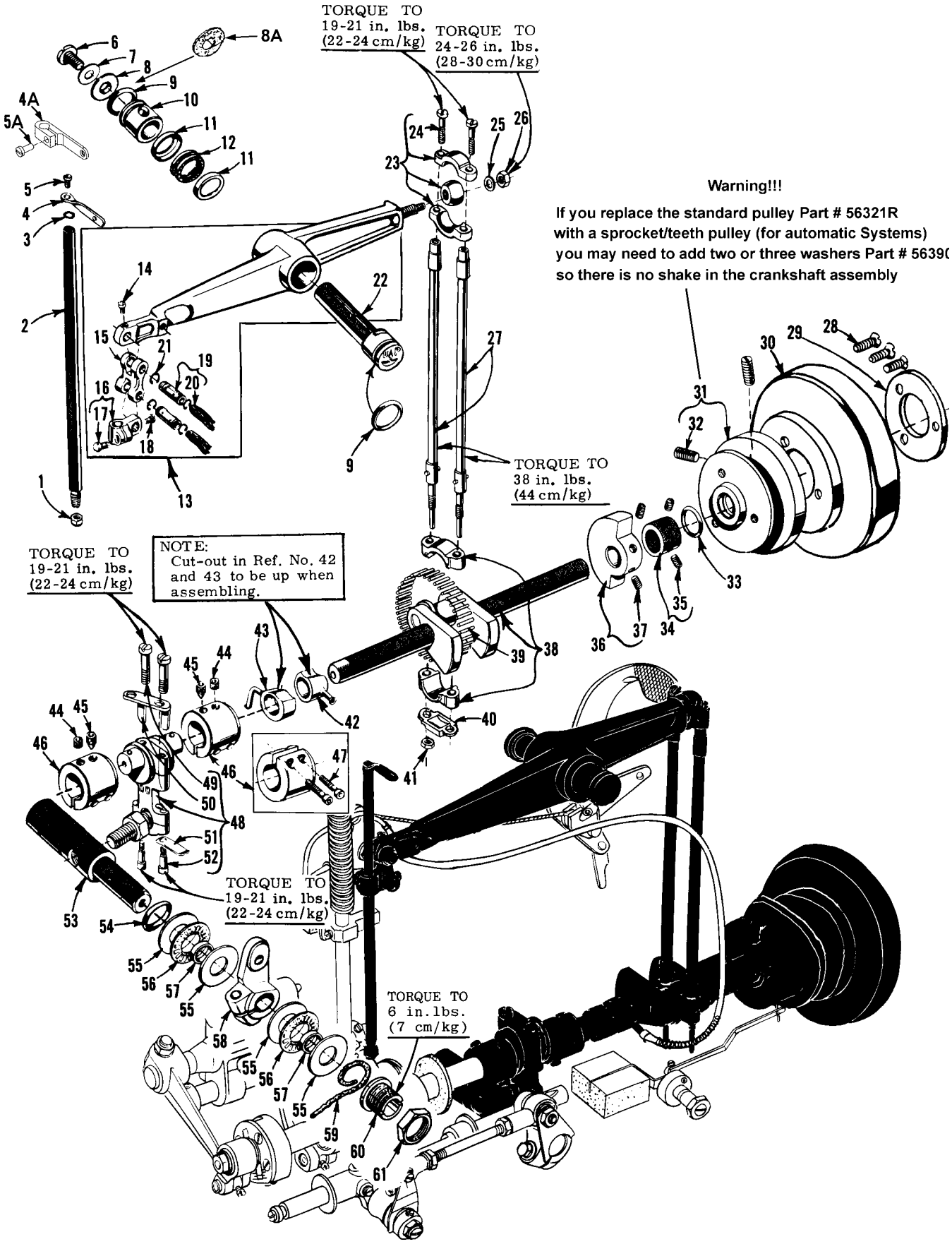

From the library of: Diamond Needle Corp

Ref. No.	Part No.	Description	Amt. Req.
1.	56	Nut	1
2.	51217C	Needle Bar	1
3.	27-435BLK	Washer, needle bar eyelet	1
4.	K74914	Eyelet, needle bar thread, for style 56100Z28B	1
4A.	K74921	Eyelet, needle bar thread, for style 56100Z30B, Z31B	1
5.	J87J	Screw, for K74914	1
5A.	22585	Screw, for K74921	1
6.	22586R	Screw	1
7.	GR51250V	Gasket	1
8.	51250D	Washer	1
8A	56382AK	Gasket	1
9.	660-625	"O" Ring	2
10.	56350E	Colar, needle lever thrust	1
11.	56350F	Cup, compression	2
12.	660-614	Ring, temper load	1
13.	29348AF	Lever Assembly, needle	1
14.	77	Screw	1
15.	56354D	Link, connecting	1
16.	51254K	Connection, needle bar	1
17.	22562A	Screw	1
18.	22564	Screw	1
19.	52336A	Pin, link	2
20.	WO3	Yarn	2
21.	660-215	Ring, retaining	4
22.	56350D	Stud, needle lever	1
23.	29066R	Ball Joint, needle lever (upper)	1
24.	22559G	Screw	2
25.	51216N	Washer	1
26.	51216P	Nut	1
27.	56316	Connecting Rod, needle lever	2
28.	22574	Screw, for 56100Z28B, Z30B	3
29.	61321L	Plate, retaining, for 56100Z28B, Z30B	1
30.	57821	Handwheel, for 56100Z28B, Z30B	1
31.	56321R	Pulley	1
32.	22894AB	Screw	2
33.	660-202	"O" Ring	1
34.	57847	Collar, thrust	1
35.	95	Screw	2
36.	51247	Counterweight	1
37.	22894J	Screw	2
38.	29476PB	Crankshaft Sub-Assembly	1
39.	51216M625	Bearing, needle, .0625 inch (1.588mm) diameter	28
-	51216M626	Bearing, needle, .0626 inch (1.590mm) diameter	28
-	51216M627	Bearing, needle, .0627 inch (1.593mm) diameter	28
40.	56316C	Guide, connecting rod	1
41.	12934A	Nut	1
42.		Pump, oil, head (See Ref. No. 32 Page 19)	1
43.		Pump, oil, base (See Ref. No. 56 Page 17)	1
44.	22894C	Screw, set	2
45.	22894D	Screw, spot	2
46.	56343F	Coupling	2
47.	22653L8	Screw	2
48.	29105AK	Crank Assembly, looper driving lever, for 56100Z28B	1
-	29105AM	Crank Assembly, looper driving lever, for 56100Z30B, Z31B	1
49.	22587K	Screw, bearing cap (upper)	2
50.	56343C	Guide, ball joint	1
51.	56343E	Splasher, oil	1
52.	22559A	Screw, bearing cap (lower)	2
53.	52942AA	Shaft, looper drive rocker	1
54.	660-202	"O" Ring	1
55.	56390H	Washer, thrust	4
56.	660-665	Bearing, needle thrust	2
57.	56390J	Ring, pilot	2
58.	56342K	Lever, looper drive, marked "D"	1
59.	CL21	Wick, oil	1
60.	52942AC	Screw, thrust synchronizing adjusting	1
61.	56342D	Nut	1

From the library of: Diamond Needle Corp

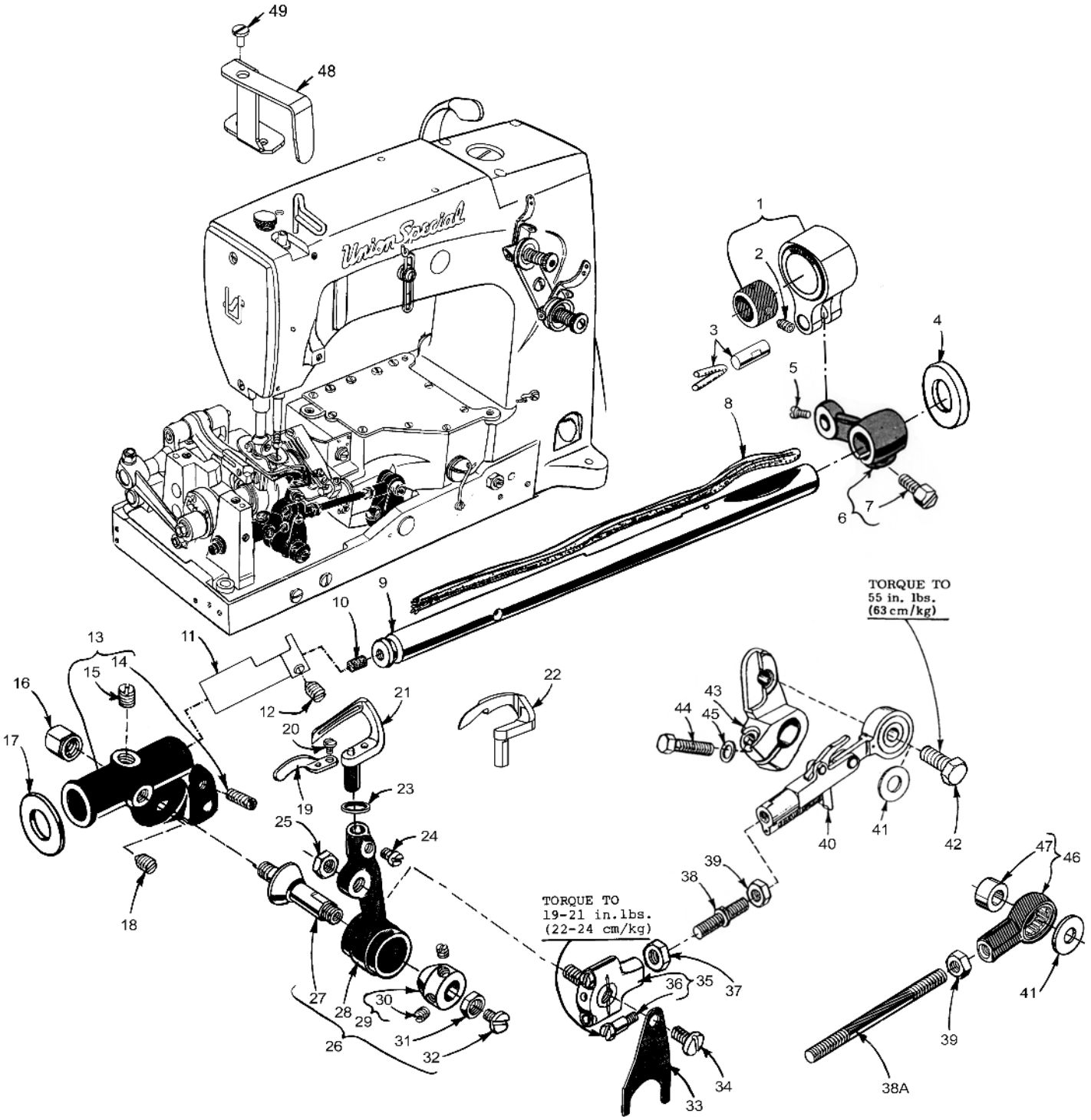

From the library of: Diamond Needle Corp

LOOPER ROCKER AND CONNECTING ROD PARTS

Ref. No.	Part No.	Description	Amt. Req.
1.	K74938	Looper avoid eccentric assembly, for 56100Z30B, Z31B	1
-	K74292	Looper avoid eccentric assembly, for 56100Z28B	1
2.	22764C	Screw	1
3.	51236J	Pin, link	1
4.	54244L	Washer, thrust	1
5.	77	Screw	1
6.	51244B	Arm, looper rocker shaft	1
7.	22519H	Screw	1
8.	WO3	Yarn	as required
9.	K74290	Shaft, looper rocker	1
10.	CO67E	Cork	1
11.	K74295	Collar, spacing	1
12.	22894W	Screw	1
13.	56344C	Frame, looper rocker	1
14.	719	Screw, stop	1
15.	98	Screw, set	1
16.	51246	Nut	1
17.	51244L	Washer, thrust	1
18.	96	Screw, spot	1
19.	51110D	Guard, looper needle	1
20.	73A	Screw	1
21.	51108DA	Looper, for styles 56100Z28B	1
-	51108E	Looper, for styles 56100Z30B, Z31B	1
22.	51108KA	Spreader, for styles 56100Z30B, Z31B	1
23.	21210	Collar, Looper, (Extra send and charge)	1
24.	73	Screw, looper	1
25.	18	Nut	1
26.	29192V	Rocker Assembly, looper	1
27.	51745	Stud, rocker cone	1
28.	56313	Rocker, looper, marked "S"	1
29.	15465F	Cone, looper rocker	1
30.	22894W	Screw	2
31.	258A	Nut, check	1
32.	22829	Screw	1
33.	56393J	Oiler, looper connecting rod ball joint (left)	1
34.	87U	Screw	1
35.	57841	Ball Joint, looper connecting rod (left)	1
36.	22729C	Screw	2
37.	269	Nut, left hand thread	1
38.	51240D	Connecting Rod, looper, for styles 56100Z30B, Z31B	1
38A.	35741A	Connecting Rod, looper, for styles 56100Z28B	1
39.	18	Nut, right hand thread	1
40.	56341N	Looper connecting rod jointed section assembly, right, for styles 56100Z30B, Z31B	1
41.	20	Washer	1
42.	627	Looper lever stud	1
43.	56342K	Looper drive lever	1
44.	22882C	Screw	1
45.	20	Washer	1
46.	29476LV	Bearing Assembly, looper connecting rod (right), for styles 56100Z28B	1
47.	56341F	Ferrule	1
48.	33795D	Needle bar guard	1
49.	22585A	Screw	1

From the library of: Diamond Needle Corp

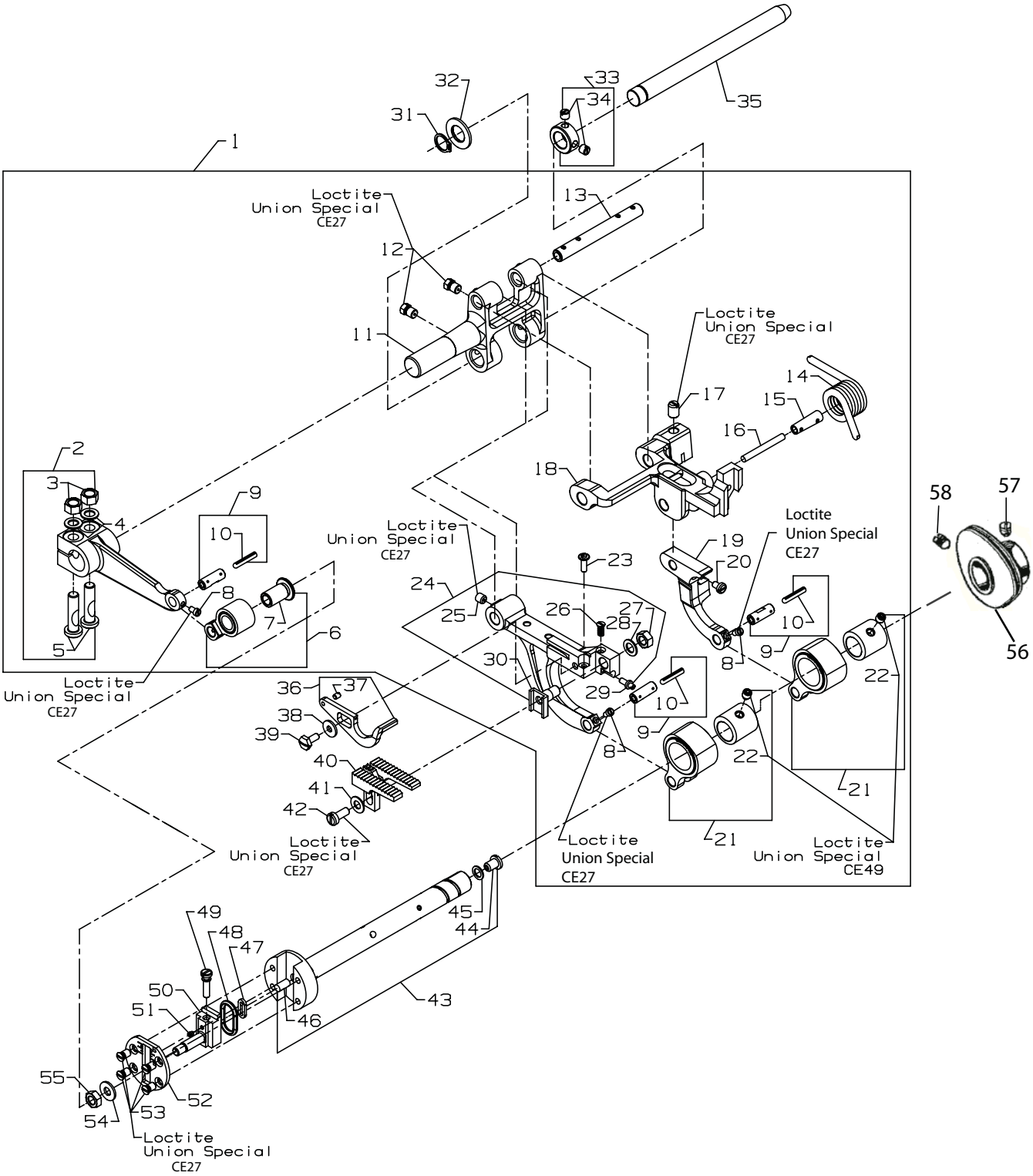

From the library of: Diamond Needle Corp

MAINSHAFT AND FEED DRIVING PARTS

Ref. No.	Part No.	Description	Amt. Req.
1.	K74899	Feed Mechanism Assembly	1
2.	K74879	Feed Rocker Arm Assembly	1
3.	55235E	Nut	1
4.	6042A	Washer	1
5.	55235D	Stud, locking	1
6.	56336N	Link, feed crank	1
7.	56336C	Ferrule	1
8.	77	Screw	3
9.	51236J	Pin, link	3
10.	WO3	Yarn	1
11.	K74880	Feed Rocker	1
12.	22852G	Screw	2
13.	K74877	Feed Bar Shaft	1
14.	51134N	Feed Bar Spring	1
15.	51134V	Pin	1
16.	666-170	Wick	1
17.	HA95	Screw	1
18.	51134L	Feed Bar, Upper	1
19.	51134M	Feed Bar Arm	1
20.	90	Screw	1
21.	K74297	Feed Lift Eccentric	2
22.	22764C	Screw	1
23.	22834	Screw, Needle Guard Height Adjusting	1
24.	51134X	Feed Bar, Lower	1
25.	22894C	Screw	1
26.	538	Screw, Height Adjusting	1
27.	258	Nut	1
28.	6042A	Washer	1
29.	22863	Screw, Holder Adjusting	1
30.	56334E	Feed Dog Holder	1
31.	660-438	Ring, Retaining	1
32.	41391	Washer	1
33.	56335D	Collar, Feed Rocker Shaft	1
34.	98	Screw	2
35.	56335L	Shaft, Feed Rocker	1
36.	56125	Guard, Rear Needle	1
37.	22801	Screw	1
38.	51225W	Washer	1
39.	K74881	Screw	1
40.	51105N	Feed Dog	1
-	C51105N	Plated Feed Dog (Extra Send & Charge Item)	1
41.	20	Washer	1
42.	93	Screw, Feed Dog	1
43.	K74872	Mainshaft	1
44.	22891B	Screw	1
45.	56322B	Gasket	1
46.	51-173BLK	Plug, Oil	1
47.	56336D	Insert, Feed Crank Stud	1
48.	660-269B	Ring, Quad	1
49.	22543C	Screw, Stitch Regulating	1
50.	56336	Stud, Feed Crank, Marked "A"	1
51.	22798C	Screw	1
52.	K74591	Plate, Mainshaft Head	1
53.	22525A	Screw	4
54.	21657E	Washer,	1
55.	269	Nut	1
56.	51123H	Cam, Take-up	1
57.	22764C	Screw	1
58.	22580D	Screw	1

From the library of: Diamond Needle Corp

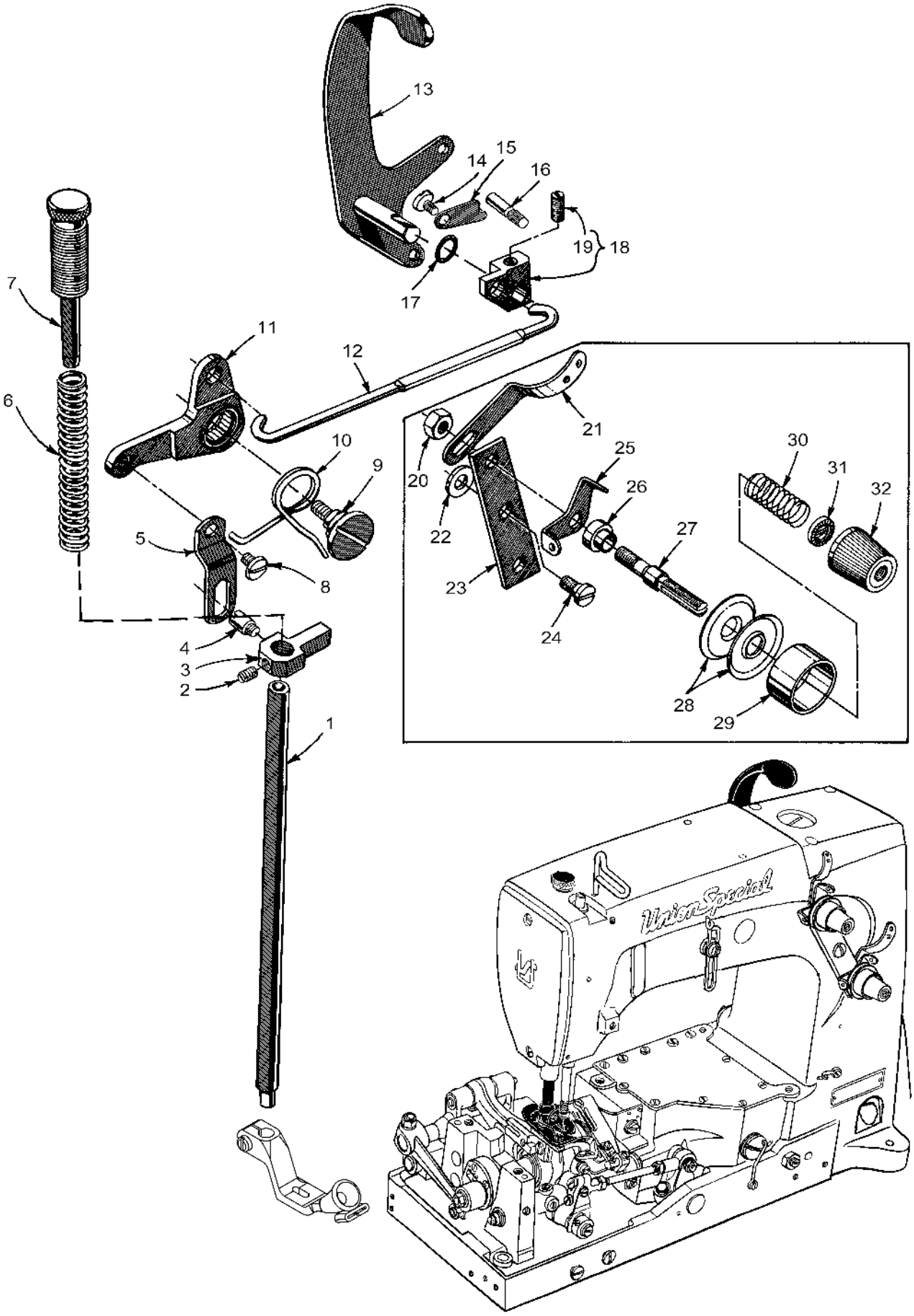

From the library of: Diamond Needle Corp

PRESSER FOOT, LIFTER LEVER AND THREAD TENSION PARTS

Ref. No.	Part No.	Description	Amt. Req.
1.	51257K	Bar, presser	1
2.	22596F	Screw	1
3.	51257M	Connection and Guide, presser bar	1
4.	402	Screw	1
5.	56383A	Link, lifter lever	1
6.	53787	Spring, presser	1
7.	56356	Regulator, presser spring	1
8.	22758C	Screw	1
9.	22557G	Screw	1
10.	56383D	Spring	1
11.	56383AA	Bell Crank, presser foot lifter lever	1
12.	56383AB	Connecting Rod, presser foot lifter lever	1
13.	51183B	Lever, presser foot lifter	1
14.	22758C	Screw	1
15.	51183C	Latch, lever	1
16.	50-703BLK	Pin, stop	1
17.	660-207	"O" Ring	1
18.	53783N	Lever, internal, presser foot lifter	1
19.	22537	Screw	1
20.	43266	Nut	1
21.	K74923	Guide, lead-in, for styles 56100Z30B, Z31B	2
-	51491C	Guide, lead-in, for style 56100Z28B	2
22.	80557	Washer, spacer	1
23.	52892	Support, tension post	1
24.	22872	Screw	1
25.	51192G	Eyelet, tension post	2
26.	51192B	Ferrule, tension post	2
27.	56392E	Post, tension	2
28.	109	Disc, tension	4
29.	56392F	Shield, thread tension spring	2
30.	51292F14	Spring, needle thread tension	1
-	51292F2	Spring, looper thread tension	1
31.	39592AK	Ferrule, tension spring	2
32.	39592Z	Nut, tension	2

From the library of: Diamond Needle Corp

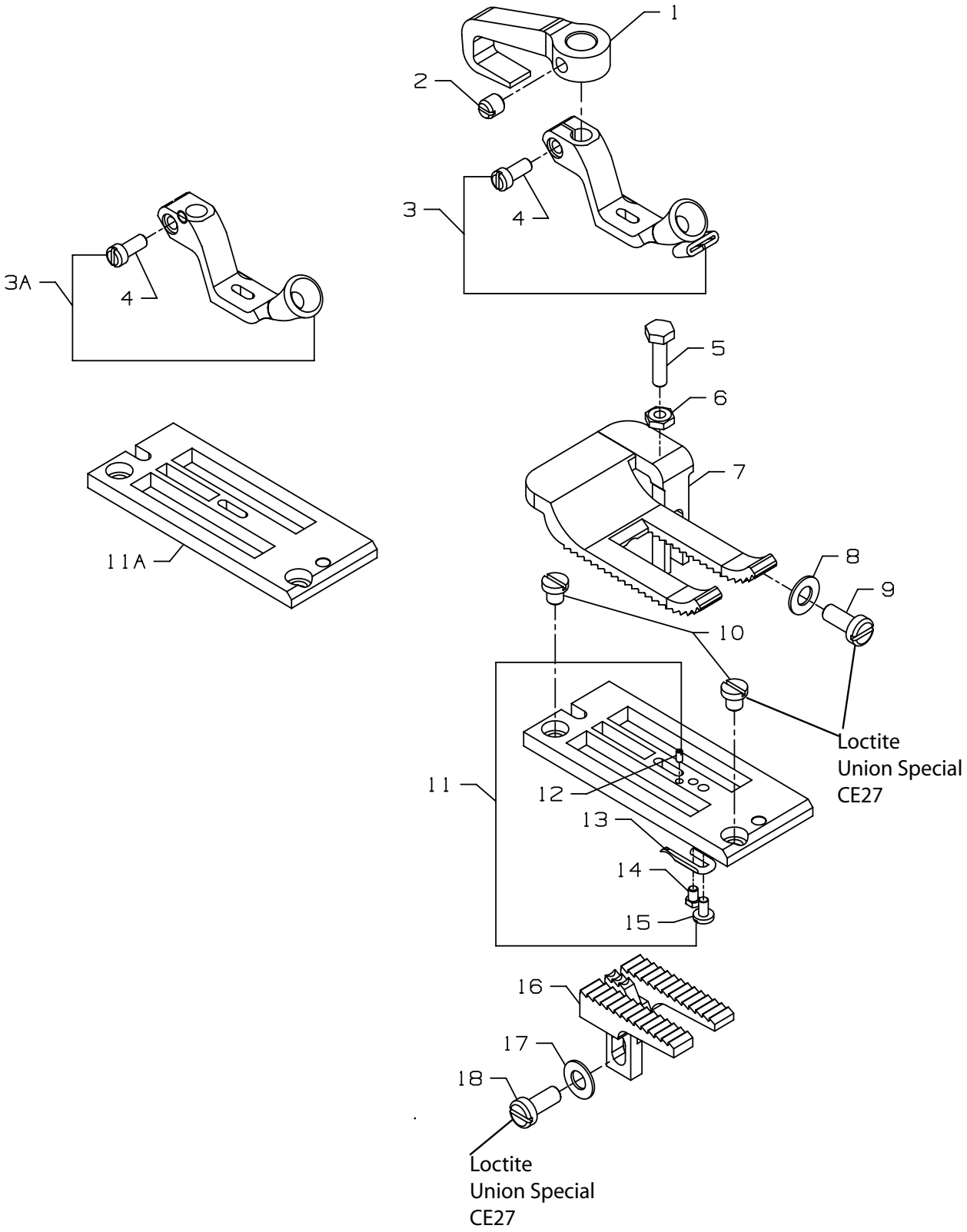

From the library of: Diamond Needle Corp

Ref. No.	Part No.	Description	Amt. Req.
1.	51051G	Top Feed Lifter Lever	1
2.	95	Screw	1
3.	K74655	Presser Foot, for styles 56100Z30B, Z31B	1
3A.	51120N	Presser Foot, for style 56100Z28B	1
4.	97	Screw	1
5.	906A	Screw	1
6.	907	Nut	1
7.	51126N	Feed Dog	1
-	C51126N	Plated Feed Dog (Extra Send & Charge Item)	1
8.	20	Washer	1
9.	93	Screw	1
10.	22570	Screw	2
11.	51124M	Throat Plate, for styles 56100Z30B, Z31B	1
11A.	51124E	Throat Plate, for style 56100Z28B	1
12.	1096B	Screw, for throat plate 51124M	1
13.	27X	Retainer, for throat plate 51124M	1
14.	50-75BLK	Pin, for throat plate 51124M	1
15.	87U	Screw, for throat plate 51124M	1
16.	51105N	Feed Dog	1
-	C51105N	Plated Feed Dog (Extra Send & Charge Item)	1
17.	20	Item)	1
18.	93	Washer	1
		Screw	

From the library of: Diamond Needle Corp

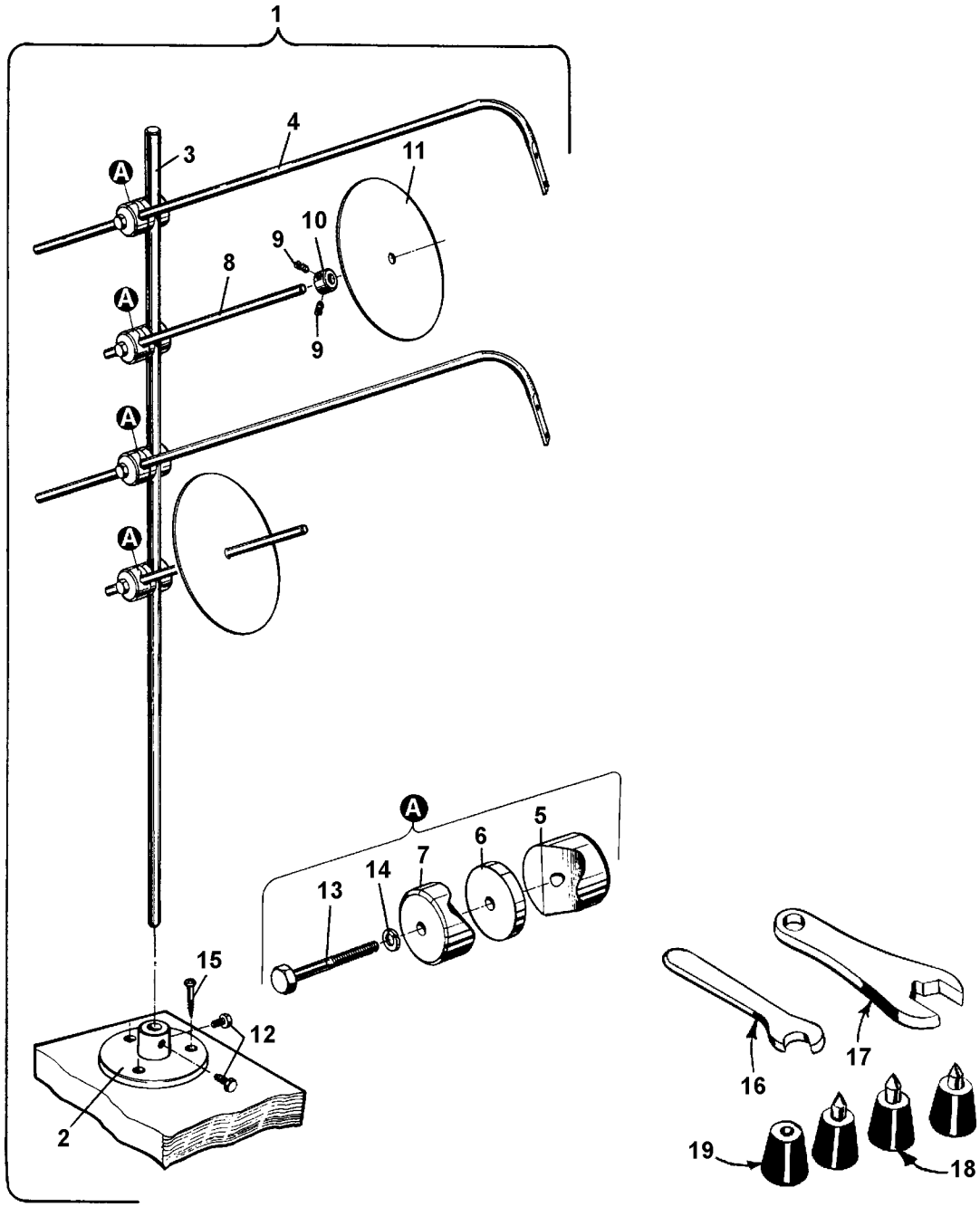

From the library of: Diamond Needle Corp

THREAD STAND AND ACCESSORIES

Ref. No.	Part No.	Description	Amt. Req.
1.	93065B2	Thread Stand, (2 cones), for 56100Z28B, Z30B	1
2.	93065BA	Base	1
3.	93065BC	Thread Stand Rod	1
4.	93065BE	Thread Guide	2
5.	93065BG	Clamp Washer, for 16mm	4
6.	93065BJ	Clamp Washer, for 12mm	4
7.	93065BL	Washer	4
8.	93065BD	Spool Pin	2
9.	531	Set Screw	4
10.	G41041B	Collar	2
11.	90805K	Spool Seat Disc	2
12.	95003	Hex. Head Cap Screw	2
13.	95068A	Hex. Head Cap Screw	4
14.	96201	Locking Ring	4
15.	90561Q	Wood Screw	3
16.	21388	Wrench, 3/8 inch (9.5mm) open end	1
17.	116	Wrench, 9/32 inch (7.1mm) open end	1
18.	51295B	Isolator	3
19.	51295A	Isolator	1
-	660-457	Cover, dust (not shown)	1
-	28604R	Oil, 16 fl. oz. Spec. 175, (not shown)	1

NOTE: 56100Z31B no threadstand

From the library of: Diamond Needle Corp

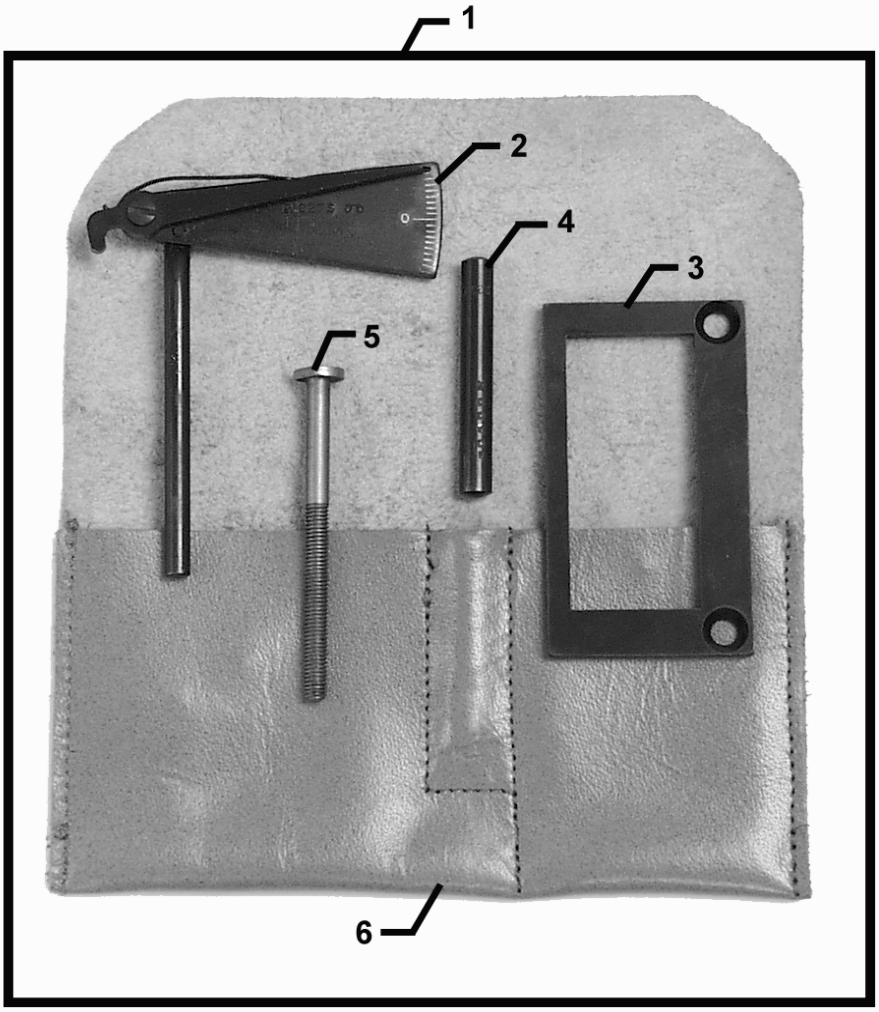

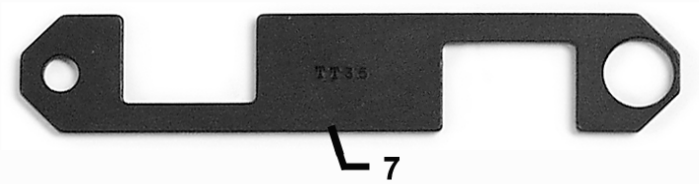

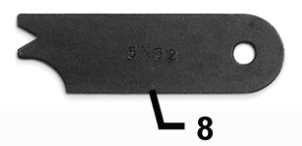

From the library of: Diamond Needle Corp

GAUGES
(EXTRA SEND AND CHARGE)

Ref. No.	Part No.	Description	Amt. Req.
1.	TT34	Syncronization Gauge Set	1
2.	21227S	Indicator	1
3.	21227T	Plate	1
4.	21227U	Pin	1
5.	99271	Screw	1
6.	21227AB	Leather Case	1
7.	TT35	Gauge	1
*8.	21225-5/32	Looper Gauge	1

*May also be purchased as TT33
Which is a full set of looper gauges.

From the library of: Diamond Needle Corp

NUMERICAL INDEX OF PARTS

Part No.	Page No.
109	27
1096B	29
116	31
11638M	17
12934A	21
15465F	23
18	23
20	17, 23, 25, 29
21210	23
21225-5/32	33
21227AB	33
21227HR	19
21227S	33
21227T	33
21227U	33
21375CE	17
21388	31
21657E	17, 25
21657X	19
22513	17
22519H	23
22524	17
22525A	25
22528	17
22537	27
22539R	19
22541C	19
22543C	25
22548	17
22557G	27
22559A	21
22559G	21
22562A	21
22564	21
22569B	19
22569C	17
22570	17, 29
22570A	17
22574	21
22580D	25
22585	17, 21
22585A	17, 23
22586R	21
22587K	21
22593	17
22596F	27
22653L8	21
22729C	23
22733E	19
22758C	27
22760A	19
22764C	23, 25
22798A	17
22798C	25
22801	25
22829	17, 23
22834	25
22839	17
22839C	19
22845B	19
22848	17, 19
22852G	25
22863	25
22872	27
22882C	23
22889A	17
22891B	25
22894AB	21
22894C	21, 25
22894D	21
22894E	17
22894J	21
22894W	23
24X	19
25	19
258	25
258A	23
25S	19
269	23, 25
27-435BLK	21
27X	29
28604R	31
29066R	21
29105AK	21
29105AM	21
29192V	23
29348AF	21
29476LV	23
29476PB	21
28480BFD	17
33795D	23
35731A	17
35741A	23
35772H	19
35897BV	19
39592AK	27
39592Z	27
40003956	17
402	27
41391	25
43266	27
50-216BLK	17
50-703BLK	27
50-75BLK	29
50-895BLK	19
51-173BLK	25
51-902BLK	19
51051G	29
51104J	17
51104L	17
51105N	25, 29
51108DA	23
51108E	23
51108KA	23
51110D	23
51120N	29
51123H	25
51124E	17, 29
51124M	17, 29
51126N	29
51134L	25
51134M	25
51134N	25
51134V	25
51134X	25
51154E	19
51157J	17
51158D	17
51180H	17
51183B	27
51183C	27
51192B	27
51192G	27
51204	17
51204A	17
51204C	17
51216M625	21
51216M626	21
51216M627	21
51216N	21
51216P	21
51217C	21
51225W	25
51236J	23, 25
51240D	23
51244B	23
51244L	23
51246	23
51247	21
51250D	21
51254K	21
51257AA	19
51257K	27
51257M	27
51280J	17
51281AC	19
51282AJ	19
51292F14	27
51292F2	27
51294R	17
51295A	31
51295B	31
51491C	27
51745	23
52336A	21
52892	27
52942AA	21
52942AC	21
52942W	19
52958B	17
52978Z	19
52A	17
531	31
53783N	27
53787	27
538	25
539	17
54244L	23
55235D	25
55235E	25
56	21
56125	25
56154	19
56170	19
56190	19
56193A	19
56193D	17
56193N	17
56313	23
56316	21
56316C	21
56321R	21
56322B	25
56334E	25
56335D	25
56335L	25
56336	25
56336C	25
56336D	25
56336N	25

From the library of: Diamond Needle Corp

NUMERICAL INDEX OF PARTS

Part No.	Page No.
56341F	23
56341N	23
56342D	21
56342K	21, 23
56343C	21
56343E	21
56343F	21
56344C	23
56344G	19
56350D	21
56350E	21
56350F	21
56354D	21
56356	27
56382	17
56382A	17
56382AA	17
56382AB	17
56382AC	19
56382AK	21
56382AT	17
56382AU	17
56382AV	17
56382AW	17
56382AX	17
56382AY	19
56382AZ	17
56382DB	17
56382G	17
56382J	17
56382M	19
56382Y	17
56383A	27
56383AA	27
56383AB	27
56383D	27
56390E	19
56390G	19
56390H	19, 21
56390J	19, 21
56392E	27
56392F	27
56393C	17
56393D	17
56393J	23
56393L	19
56393W	19
57821	21
57836B	19
57841	23
57842B	19
57847	21
57890B	19
6042A	25
61321L	21
627	23
660-202	21
660-207	27
660-215	21
660-269B	25
660-342	17
660-438	25
660-457	31
660-614	21
660-625	21
660-665	19, 21
660-694	17
666-170	25
666-259	19
719	23
73	23
73A	23
77	17, 21, 23, 25
7947	17
80	19
80557	27
87U	23, 29
90	19, 25
90561Q	31
906A	29
907	29
90805K	31
93	25, 29
93065B2	31
93065BA	31
93065BC	31
93065BD	31
93065BE	31
93065BG	31
93065BJ	31
93065BL	31
95	19, 21, 29
95003	31
95068A	31
96	23
96201	31
97	29
98	23, 25
98A	17
99271	33
99295	19
B51101A	19
CL21	21
CO67E	23
C51105N	25, 29
C51126N	29
G41041B	31
GR-51250V	21
G51381BA	19
G51381BD	19
G51382BA	19
GR-56393T	19
HA95	25
J87J	17, 21
K74290	23
K74292	23
K74295	23
K74297	25
K74334	19
K74335	19
K74591	25
K74592	19
K74642	17
K74655	29
K74872	25
K74877	25
K74879	25
K74880	25
K74881	25
K74899	25
K74914	21
K74921	21
K74922	19
K74923	27
K74938	23
TA0750404RO	17
TT34	33
TT35	33
WO3	21, 23, 25

From the library of: Diamond Needle Corp

Union Special Corporation
Corporate Office
One Union Special Plaza
Huntley, IL 60142
Phone: 847•669•5101
Fax: 847•669•4454

Union Special GmbH
European Distribution Center
Raiffeisenstrasse 3
D-71696 Möglingen, Germany
Tel: 49•07141•247•0
Fax: 49•07141•247•100

Finest Quality

Union Special®
INDUSTRIAL SEWING EQUIPMENT

From the library of: Diamond Needle Corp